STEREO AMPLIFIER

SA-8500

KCU, FV, GN

〈ART-122-0〉

Service Manual

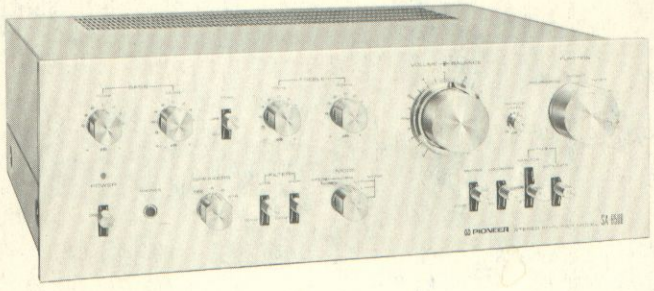

PIONEER®

CONTENTS

1. SPECIFICATIONS 2
2. FRONT PANEL FACILITIES 3
3. CONNECTION DIAGRAM 5
4. CIRCUIT DESCRIPTION 7
5. LEVEL DIAGRAM 10
6. BLOCK DIAGRAM 11
7. DISASSEMBLY 13
8. ADJUSTMENTS
   - 8.1 Adjustment for Junction Point 17
   - 8.2 Adjustment for Idle Current 18
9. EXPLODED VIEW 19
10. PARTS LOCATIONS 28
11. SCHEMATIC DIAGRAMS, P.C. BOARD PATTERNS AND PARTS LISTS
    - 11.1 Schematic Diagrams and Miscellaneous Parts 31
    - 11.2 Equalizer Amplifier Assembly (AWF-016) 39
    - 11.3 Control Amplifier Assembly (AWG-034) 43
    - 11.4 Power Amplifier Assembly (AWH-042) 47
    - 11.5.1 Switch Circuit Assembly (AWS-083) For "KCU" and "FV" Type 51
    - 11.5.2 Switch Circuit Assembly (AWS-085) For "GN" Type 55
    - 11.6 5P Connector Assembly (AWX-062) 61
12. PACKING 62

NOTE:
THE MODEL SA-8500 COMES IN THREE VERSIONS DISTINGUISHED AS FOLLOWS:

Round label on rear panel	Voltage	Type
KCU	120V only	UL (U.S.A.) and CSA (Canada) approved.
FV	110V, 120V, 130V, 220V, and 240V (switchable)	General export model. SEV (Switzerland) approved.
GN	220V only	SEMKO (Sweden), DEMKO (Denmark), NEMKO (Norway) and EI (Finland) approved.

1. SPECIFICATIONS

Simiconductors

Transistors 45
Diodes 27

Power Amplifier Section

Circuitry . . . . . 1-stage differential amplifiers. Direct coupled OCL.
Continuous Power Output from 20 Hertz to 20,000 Hertz
(Both channels driven) . . . . 60 watts per channel (8 ohms)
75 watts per channel (4 ohms)
at 1,000 Hertz
(Both channels driven) . . . . 65 watts per channel (8 ohms)
. . . . 85 watts per channel (4 ohms)
Total Harmonic Distortion at 20 Hertz to 20,000 Hertz
(Continuous Rated Power Output) . . . . . No more than 0.1%
(30 watts per channel Power Output, 8 ohms) . . . . . No more than 0.05%
(1 watt per channel Power Output, 8 ohms) . . . . . No more than 0.05%
Intermodulation Distortion at 20 Hertz to 20,000 Hertz
(Continuous Rated Power Output) . . . . . No more than 0.1%
(30 watts per channel Power Output, 8 ohms) . . . . . No more than 0.05%
(1 watt per channel Power Output, 8 ohms) . . . . . No more than 0.05%
Frequency Response . . . . . 10 Hertz to 80,000 Hertz $^{+0}_{-1}$dB
Input : Sensitivity/Impedance
(POWER AMP IN) . . . . . 1V/50k ohms
Output : Speaker . . . . . A, B, A+B
Headphone . . . . . Low Impedance
Damping Factor
(20 Hertz to 20,000 Hertz, 8 ohms) 30
Hum and Noise
(IHF, short-circuited, A Network) 100dB

Preamplifier Section

Circuitry
Equalizer amplifier . . . . . 3-stage direct-coupled amplifier.
Control amplifier . . . . . 2-stage direct-coupled NFB type.
Input : Sensitivity/Impedance
PHONO 1 . . . . . 2.5mV/50k ohms
PHONO 2 . . . . . 2.5mV~5mV/50k ohms
MIC . . . . . 7.5mV~15mV/85k ohms
TUNER . . . . . 150mV/50k ohms
AUX . . . . . 150mV/50k ohms
TAPE PB 1 . . . . . 150mV/50k ohms
TAPE PB 2 . . . . . 150mV/50k ohms
TAPE PB 2 (DIN connector) . . . . . 150mV/50k ohms
PHONO Overload Level (T.H.D 0.1%)
PHONO 1 . . . . . 200mV (1,000 Hertz)
PHONO 2 . . . . . 200mV~400mV (1,000 Hertz)
Output : Level/Impedance
TAPE REC 1 . . . . . 150mV
TAPE REC 2 (DIN connector) . . . . . 30mV/80k ohms
PRE OUT . . . . . 1V/1k ohms
Total Harmonic Distortion at 20 Hertz to 20,000 Hertz. . . No more than 0.05%
Frequency Response
PHONO (RIAA equalization). 30 Hertz to 15,000 Hertz ±0.3dB
TUNER, AUX, TAPE PB . . . 7 Hertz to 40,000 Hertz $^{+0}_{-1}$dB
Tone Control
BASS . . . . . SUB ±6dB by 2dB step (50 Hertz)
MAIN ±8dB by 2dB step (100 Hertz)
TREBLE . . . . . SUB ±6dB by 2dB step (20,000 Hertz)
MAIN ±8dB by 2dB step (10,000 Hertz)
Filter
LOW . . . . . 30 Hertz (12dB/oct)
HIGH . . . . . 8,000 Hertz (12dB/oct)
Loudness Contour
(Volume control set at −40dB position) . . . . . +8.5dB (100Hz)
+4dB (10,000Hz)
Hum and Noise (IHF, Short-circuited, A Network)
PHONO 1 and 2 . . . . . 70dB
MIC 65dB
TUNER, AUX, TAPE PB . . . 90dB
Muting . . . . . 0, −20dB

Miscellaneous

Power Requirements . . . . . AC 120V 60 Hertz or 220V 50/60 Hertz or 110, 120, 130, 220 and 240V (Switchable) 50/60 Hertz
Power Consumption . . . . . 240 watts
Dimensions . . . . . 420 (W) x 150 (H) x 345 (D) mm
16-9/16 x 5-7/8 x 13-9/16 in.
Weight : Without Package . . . 13kg (29 lb 11oz)
With Package . . . . . 14.5kg (31 lb 4 oz)

Furnished Parts

Connection Cord with Pin Plugs . 1
Operating Instructions 1
Fuse 2.5A 1
Fuse 5A . . . . . 1 (5-line voltage model)

NOTE:
Specifications and the design subject to possible modification without notice due to improvements.

2. FRONT PANEL FACILITIES

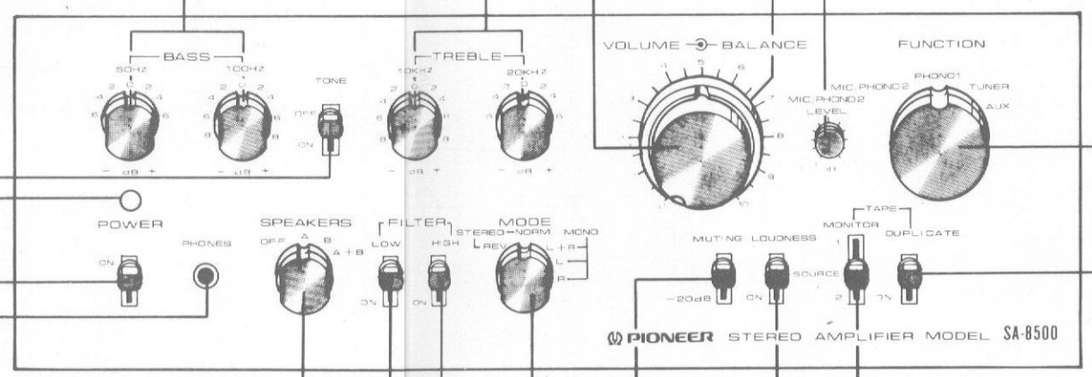

BASS TWIN CONTROL

Adjusts low frequency tone.

100 Hz: Adjusts frequency band below 400Hz. Control effectiveness at 100Hz is ± 8dB by 2dB step.

50Hz: Provides additional control to the 100Hz knob for the frequency band below 200Hz. Control effectiveness at 50Hz is ± 6dB by 2dB step.

TREBLE TWIN CONTROL

Adjusts high frequency tone.

10kHz: Adjusts frequency band above 2.5kHz. Control effectiveness at 10kHz is ± 8dB by 2dB step.

20kHz: Provides additional control to the 10kHz knob for the frequency band above 5kHz. Control effectiveness at 20kHz is ± 6dB by 2dB step.

VOLUME CONTROL

Adjusts volume from speakers or headphones. Clockwise rotation increases volume.

BALANCE CONTROL

Adjusts relative volume between left and right speaker systems or headphones. Clockwise rotation from center increases right channel volume, while counter-clockwise rotation increases left channel volume.

MIC/PHONO 2 LEVEL CONTROL

Adjusts sensitivity to PHONO 2 jacks and MIC jack.

TONE SWITCH

When set to OFF, the tone control circuit is disengaged and a flat frequency response obtained. The tone controls (BASS & TREBLE) do not function in this case. This switch is convenient for various kinds of checking, including cartridge and speaker tone, tone control effectiveness, and listening room acoustics.

FUNCTION SWITCH

Selects desired program source for listening.

PHONO 1: For playing records on a turntable connected to the PHONO 1 jacks.

MIC/PHONO 2: Same as above, for PHONO 2, or for reproduction through a microphone connected to the MIC jack on the rear panel. Note, when the microphone is connected to the jack, the turntable connected to the PHONO 2 jacks cannot be used.

TUNER: For listening to broadcasts through the tuner.

AUX: For playing signals fed to the AUX jacks.

PILOT LAMP

Lights to indicate power ON.

POWER SWITCH

Switch for turning on power. When switched ON, sound is not immediately obtained from the speakers. This is due to the operation of the internal muting circuit and does not signify malfunction.

PHONES JACK

Plug stereo headphones into this jack for private listening.

NOTE:
Set the SPEAKERS switch to OFF when listening through the headphones only.

SPEAKERS SWITCH

OFF: Speaker sound cut off

A: Activates speakers connected to the 'A' SPEAKERS terminals

B: Activates speakers connected to the 'B' SPEAKERS terminals

A + B: Sound obtained from both A and B speaker systems

NOTE:
Set switch to OFF when listening only through headphones, or to temporarily interrupt the sound.

LOW FILTER SWITCH

Set to ON if low frequency noise, such as motor rumble or hum etc., becomes objectionable.

HIGH FILTER SWITCH

Set to ON if high frequency noise, such as record scratch noise etc., becomes objectionable.

MODE SWITCH

STEREO REV: Reverses left and right channels of a stereo signal and presents them stereophonically.

STEREO NORM: Set to this position for normal stereo listening.

MONO L + R: Left and right channels of the input signal are mixed and presented monophonically.

MONO L: Left channel input signal is presented monophonically from both left and right speakers.

MONO R: Right channel input signal is presented monophonically from both left and right speakers.

LOUDNESS SWITCH

When listening at low volume, set this switch to ON to enhance low and high frequencies. The human ear possesses different characteristics when listening to low and high volume sounds. The LOUDNESS switch compensates for these characteristics.

MUTING SWITCH

Reduces volume by 20dB. Employ for temporarily reducing the volume, as when changing records or tapes. This eliminates the need for repeatedly adjusting the VOLUME control.

TAPE MONITOR SWITCH

1: To perform tape playback or monitoring of tape deck connected to the TAPE 1 (REC & PB) jacks.

SOURCE: Set to this position when not playing tape.

2: To perform tape playback or monitoring of tape deck connected to the TAPE 2 (REC & PB) jacks.

NOTE:
Be sure to set this switch to SOURCE when employing turntable or tuner. Sound will not be obtained from the speakers at positions 1 and 2 in these cases.

TAPE DUPLICATE SWITCH

Set to ON when employing 2 tape decks to duplicate or edit recorded tapes.

3. CONNECTION DIAGRAM

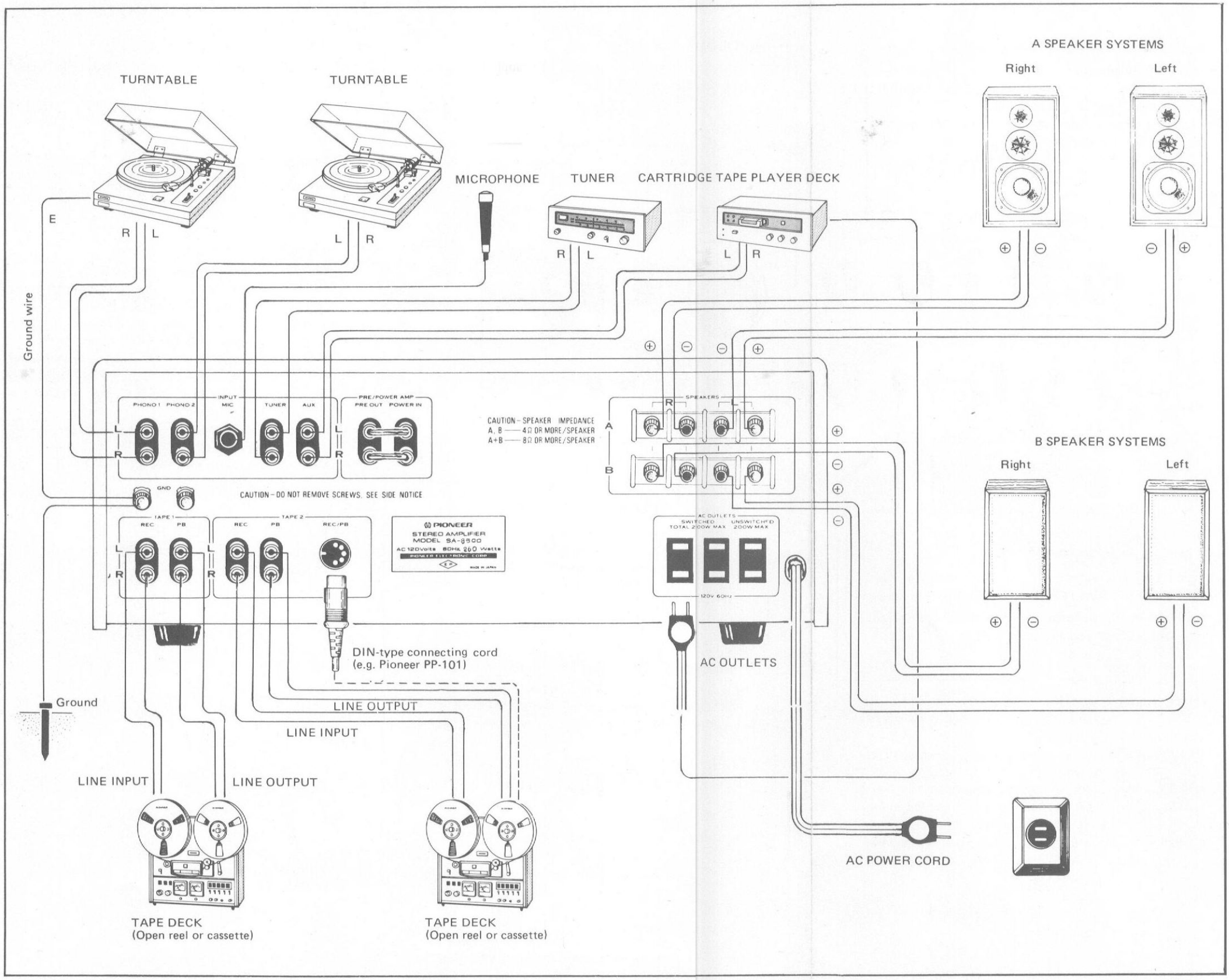

LINE VOLTAGE AND FUSE

SA-8500 amplifier are designed to accept different line voltages, according to the country in which they are to be used, although the operation of the various models in the same in every other respect. The line voltage connection is on the rear panel, CONNECTION DIAGRAM shows the line voltage of a 120V only model. Fig. A shows the line voltage connection of a model designed to operate at 220V only.

Fig. B shows the line voltage selector and fuse of a model designed to operate at any of five pre-selected voltages (110V, 120V, 130V, 220V, 240V).

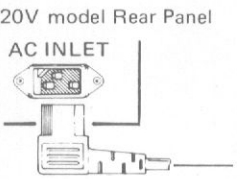

Fig. A

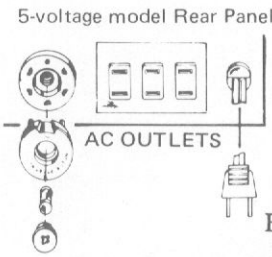

Fig. B

CHANGING LINE VOLTAGE SETTING AND FUSE

To remove the fuse, unscrew the fuse cap located in the center of the line voltage selector and withdraw it, together with the fuse. Next, pull the line voltage selector plug out of its socket, rotate it until the cutaway aligns with the appropriate line voltage marked on the back of the unit, then push it back into its socket. It is important to check the rating of the fuse; a 2.5A fuse should be used with either 220V or 240V, while a 5A fuse should be used for 110V, 120V or 130V operation. If the fuse rating is correct, replace it and screw in the fuse cap.

FUSE REPLACEMENT

When the fuse blows, remove the fuse cap and replace the fuse with a new one. Fig. C.

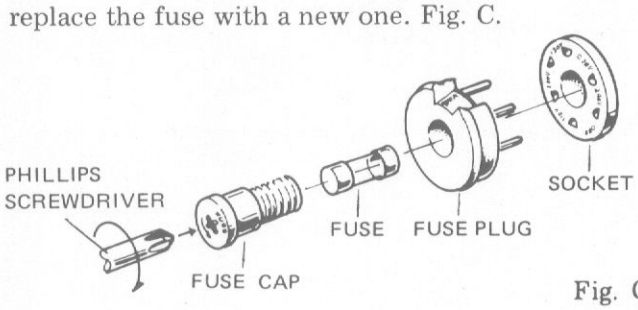

Fig. C

4. CIRCUIT DESCRIPTION

The SA-8500 is a 2-channel integrated stereo amplifier.
The descriptions given here refer mainly to the left channel. Please refer to the block diagram on pages 11 to 12.

Equalizer Amplifier (Q1 – Q3)

This amplifier amplifies the low level signals from the cartridge and microphone inputs. Equalization is performed in accordance with the RIAA curve. This is a three-stage, direct-coupled, collector-to-emitter feedback type, consisting of transistors Q1 – Q3.
By using the balanced power supply, both the input and output voltages can be lowered, and the charge potential of coupling capacitor becomes reduced. As a result, the shock noise which occurs in changing the switch are reduced. The gain is 35.5dB at 1kHz, the deviation from the RIAA standard is ±0.3dB (from 30Hz to 15kHz) and the overload level is 200mV rms at lkHz.

Tone Control Amplifier (Q4 – Q7)

This circuit amplifies the signals from the equalizer and the input signals it from TUNER terminals and TAPE PB terminals, and then feeds the amplified signals to the power amplifier. And also, the tone controls are performed here. This is of the NFB type, employing balanced power supply. The circuit consisting of Q4 and Q5 is 2-stage direct-coupled circuit. Here, the signals are raised to sufficient level for driving the power amplifier.
The description given here refer to the sub tone control circuit.

1. LOW FREQUENCY CONTROL

The low frequency control circuit is shown in Fig. 1-a, and the equivalent circuit, when boosting low frequency, is shown in Fig. 1-b.
As the parallel impedance of VR1 and C10, in Fig. 1-b, is high at low frequency, the volume of the NFB decreases and the gain in the low frequency range increases. The equivalent circuit, when cutting out low frequencies, is shown in Fig.1-c. In this case, the input signal is applied to Q6, through the parallel impedance of VR1 and C9, which is high in the low frequency range and suppresses the lower frequency signals.

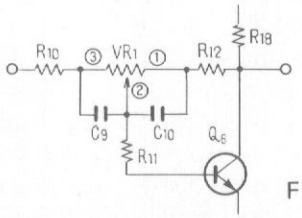

Fig. 1-a

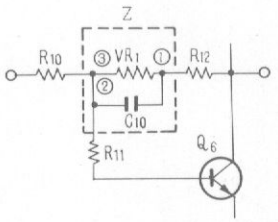

Fig. 1-b

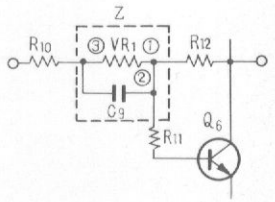

Fig. 1-c

2. HIGH FREQUENCY CONTROL

The high frequency control circuit is shown in Fig. 2-a, and the equivalent circuit, when boosting high frequencies, is shown in Fig. 2-b.
In this circuit, the input signal is applied to Q6 through the parallel impedance circuit. This impedance is small in the high frequency range and produces a signal with an enhanced high range. Fig. 2-c shows the equivalent circuit when cutting out high frequencies. As the impedance of R10, R11 and C11 of the circuit becomes small, the level of the NFB increases and the gain of the circuit decreases.
Main tone control circuit is the same as the above description.

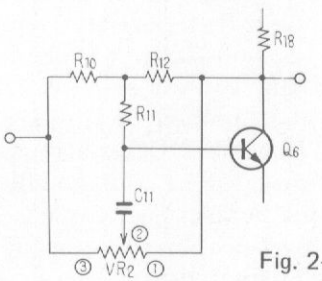

Fig. 2-a

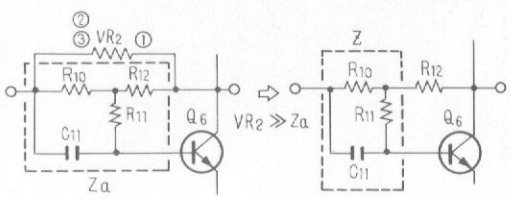

Fig. 2-b

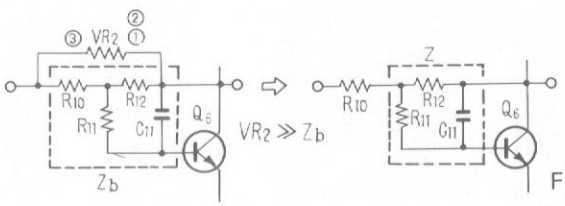

Fig. 2-c

Filter Circuit (Q8)

The circuit shown in Fig.3. has a steep characteristic of 12dB/oct, and is effective in removing noise. The low cutout filter can be switched to the two positions of OFF 30 Hz. Change-over of this cut-off frequency is achieved by changing over C1 and C2. The high cutout filter can be switched to the two positions of OFF and 8kHz, and this is achieved by the changeover of C3 and C4.

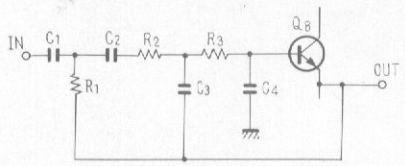

Fig. 3

Power Amplifier (Q9 — Q17)

The power amplifier of the SA-8500 is an all-stage direct-coupled pure complementary, OCL circuit; with direct compling at all stages, employing a differential amplifier and bias compensation circuit to stabilize the operating point. The differential amplifier, consisting of Q9 and Q10 in the first stage, amplifies the input signal and stabilizes the voltage of the junction point of the power stage.

Since the base voltage of Q9 is a references for the voltage of the junction point of the power stage, the bias compensation circuit is provided in the base circuit of Q9. The silicon diode, D1 is used to compensate temperature.

VR1 is provided to adjusting the base voltage of Q9 to 0 volt, resulting in, zero voltage at the junction point of the power stage. Q11 is a voltage amplifier, which drives the next complementary stage. Due to the boot-strap circuit inserted in the load to Q11, the voltage gain of Q11 becomes large. The NFB is applied to the base of Q10 by R14 and C3. The entire DC is also applied to the base of Q10 through R13, thus stabilization of the output midpoint potential is secured. The AC NFB is determined by the split circuit of R13 and R14 to improve the characteristics.

Protection Circuit (Q18—Q24)

This protection circuit functions to protect the speakers from damage due to short-circuit of the load, etc., and performs a muting operation to cut noise and distortion which occur when switching the power on and off.

The circuit is shown in Fig.5, and consists of a bridge type over-current and overload detector, a differential amplifier DC voltage detector, and a power switch on/off detector section.

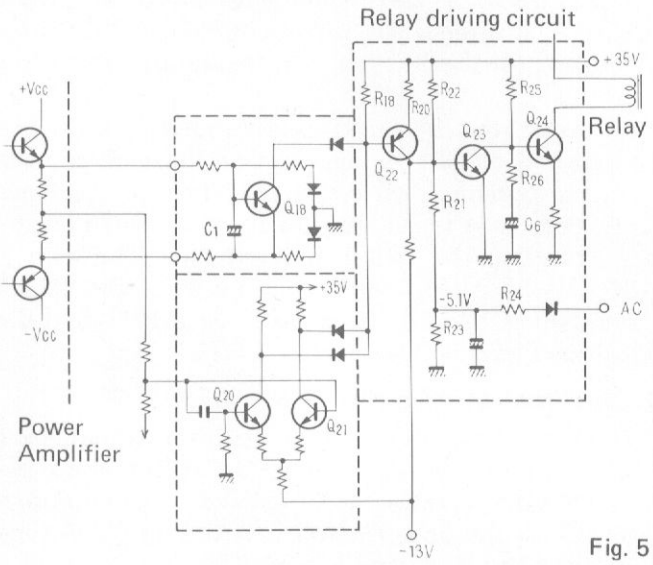

Fig. 5

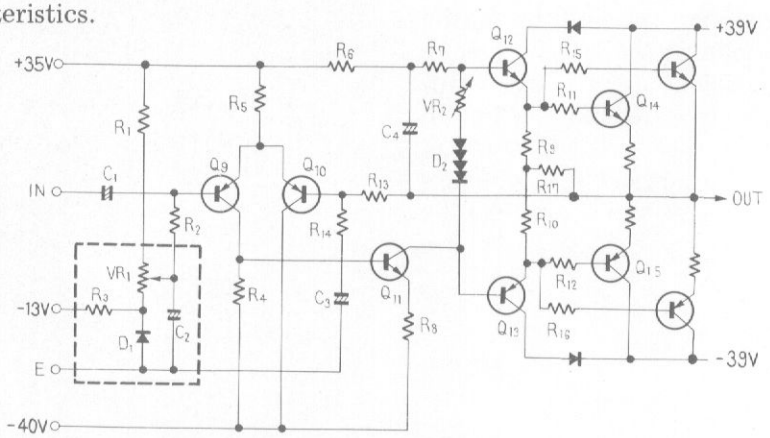

Fig. 4

1. OVER-CURRENT AND OVERLOAD DETECTION

The equivalent circuit of this detector section is shown in Fig. 6-a, and Fig. 6-b shows the equivalent circuit at the time of a positive half cycle. When this equivalent circuit is overloaded, the balance of the bridge, formed by RE1, R1, R5 and RL, is disturbed, and a potential is produced between d and b in such a direction that Q18 is turned on.

As Q18 is turned on, the collector current increases, the relay driving circuit functions and the relay switch of the output circuit is turned off. After the cause of the overload is removed, the bias of Q18 is reduced and the relay switch turns on to automatically restore normal operation, Fig. 6-C shows the equivalent circuit at the time of a negative half cycle. In this circuit a potential is produced between b and e as above, and Q18 is turned on.

2. DETECTION OF DC VOLTAGE

This is a differential amplifier consisting of Q20 and Q21, as shown in Fig. 7. The bases of Q20 and Q21 are connected to the junction points of the right and left power amplifiers. When the DC balance of the power stage is lost for some reason, a potential difference is produced in the input signal to the differential amplifier, and the collector currents of Q20 and Q21 are put out of balance. Thus, the relay driving circuit functions, and the relay switch is turned off.

3. RELAY DRIVING CIRCUIT

Q22 — Q24, in Fig. 5, comprise the relay dirving circuit.

In the normal condition reverse bias is applied to the base of Q22, and Q22 is in a cut-off condition. When one of the above mentioned detection circuits operates, current flows through R18, the base potential falls and Q22 is switched on. Consequently Q23 comes on and Q24 goes off. When Q24 goes off, the current of the relay circuit is switched off, to release the switch of the output circuit.

When the power switch is turned on, a delay occurs in this circuit R25, R26 and C6, in the base circuit of Q24, are the time constant elements which determine the delay time. When the power is switched on, C6 charges to a potential of +35 volts through R25 and R26, and Q24 is kept in the OFF condition during this time. When the power source is switched off the muting operation of Q23 prevents shock noise. In the normal condition, potentials of +35 volts and −5.1 volts are applied to Q23 through R21 and R22, and resultant potential at the base of Q23 is −1 volt, keeping it in the cut-off condition. When the power supply is turned off, the potential of −5.1 volts disappears immediately, due to the small time constant of the power circuit. Thus a positive base potential remains, switching Q23 on, which in turn switches off Q24 and hence the relay.

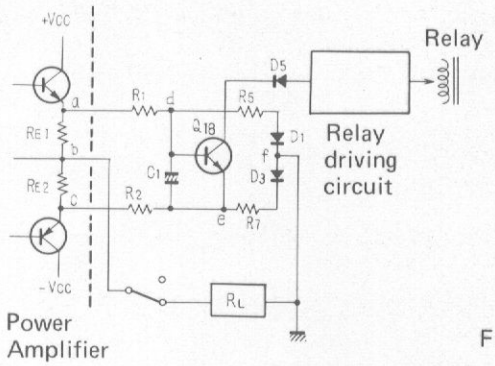

Fig. 6-a

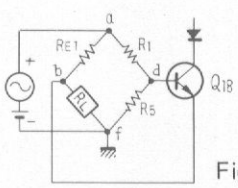

Fig. 6-b

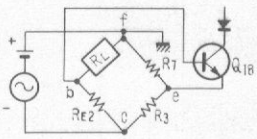

Fig. 6-c

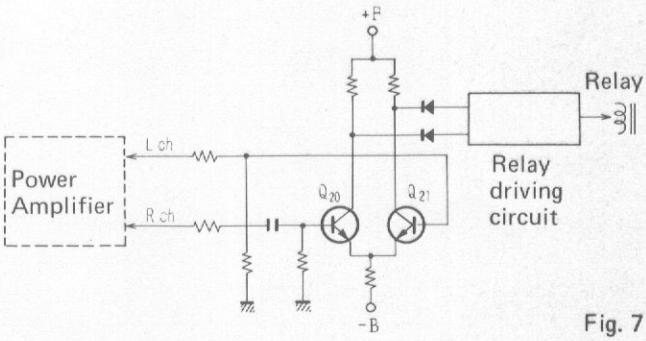

Fig. 7

Power Supply Circuit (Q25—Q27)

The SA-8500 uses a balanced power supply with a built-in constant potential circuit. Apart from the pre-driver stage, all other components are in constant potential condition. Therefore, not only is operating stability superior, but it is effectives in reducing residual noise.

The power source, after the pre-driver stage of the amplifier circuit, is provided by the bridge rectifier circuit and the 15,000μ F capacitor.

5. LEVEL DIAGRAM

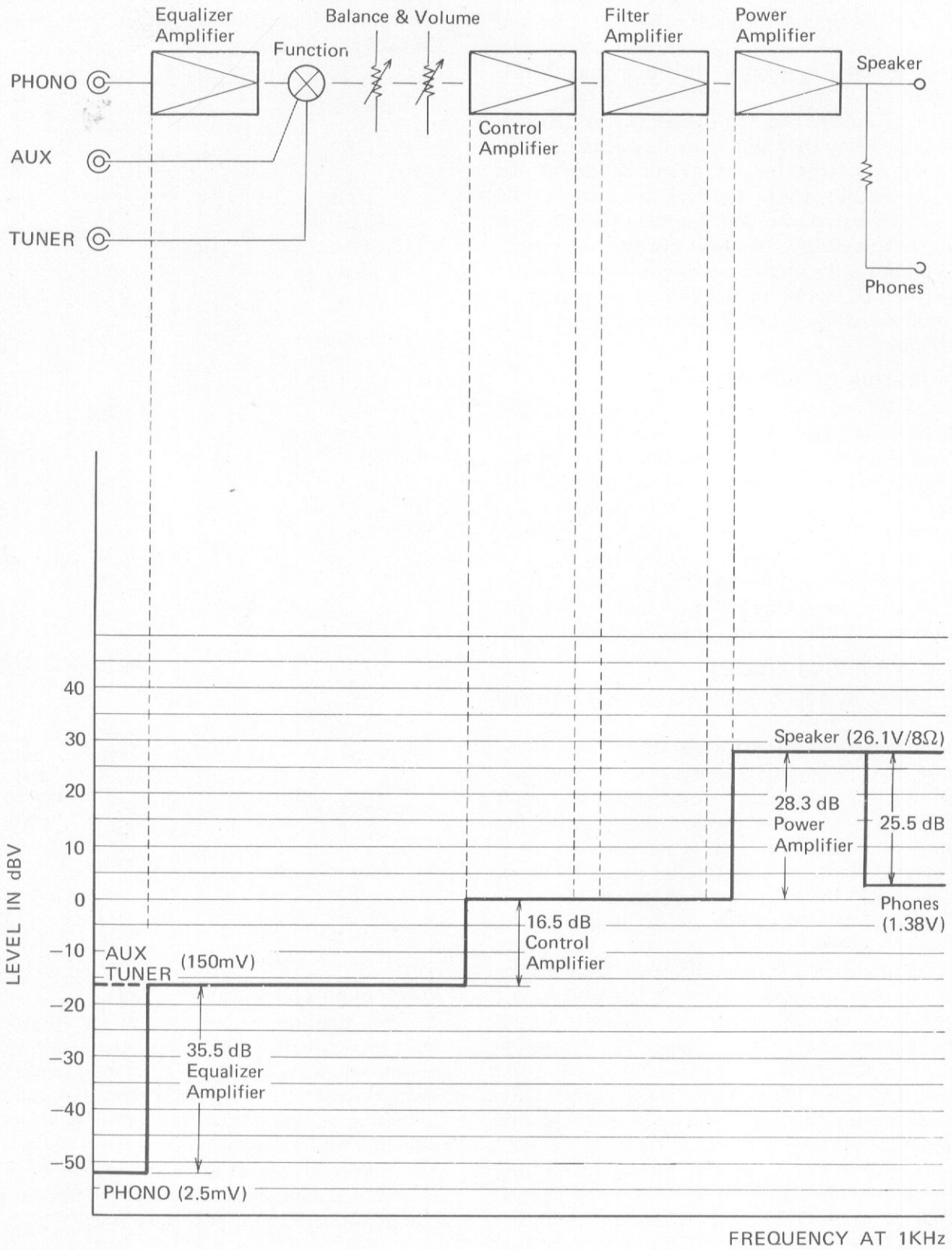

6. BLOCK DIAGRAM

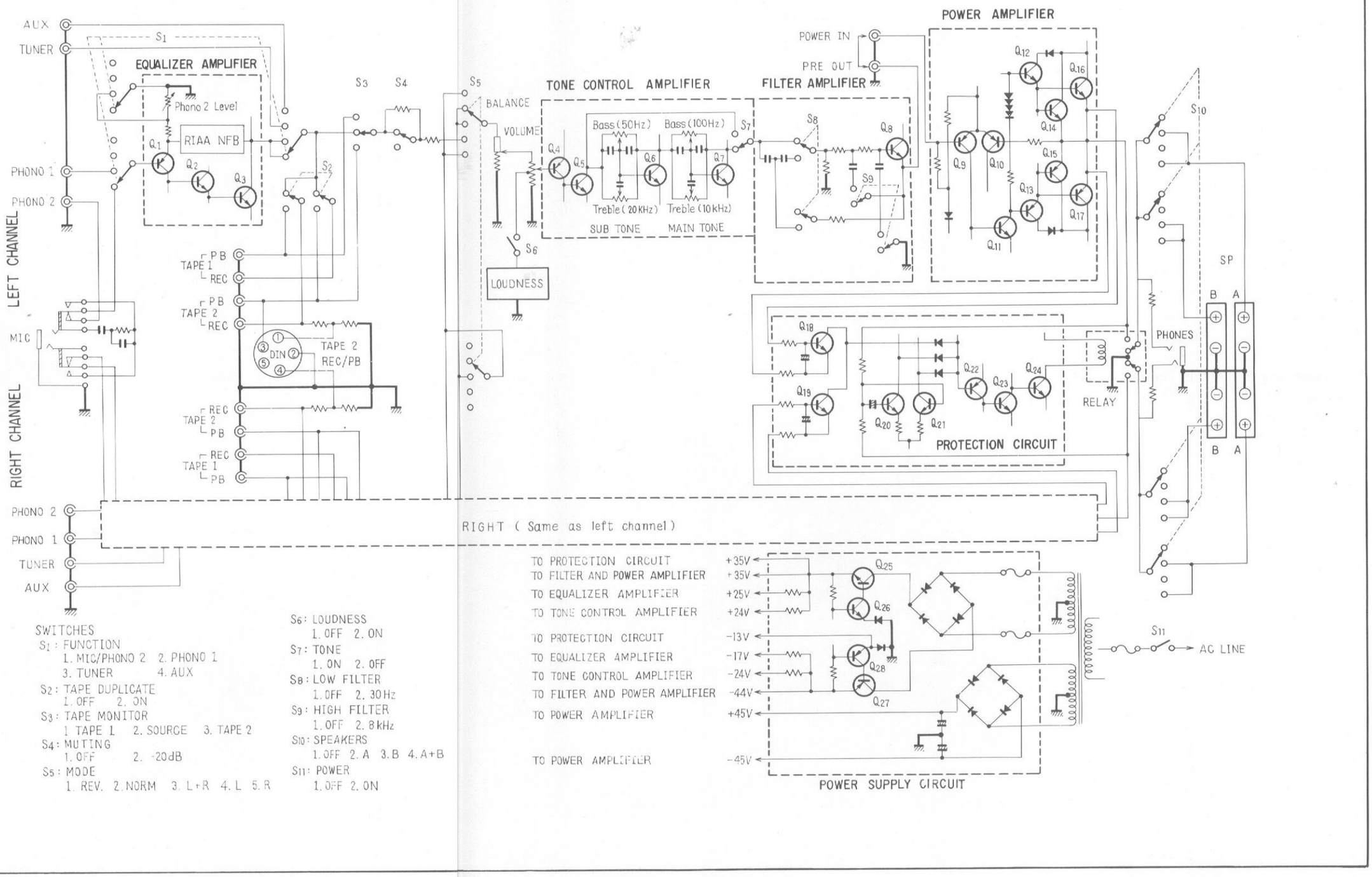

SWITCHES

S1 : FUNCTION
1. MIC/PHONO 2 2. PHONO 1
3. TUNER 4. AUX

S2 : TAPE DUPLICATE
1. OFF 2. ON

S3 : TAPE MONITOR
1 TAPE 1 2. SOURCE 3. TAPE 2

S4 : MUTING
1. OFF 2. -20dB

S5 : MODE
1. REV. 2. NORM 3. L+R 4. L 5. R

S6 : LOUDNESS
1. OFF 2. ON

S7 : TONE
1. ON 2. OFF

S8 : LOW FILTER
1. OFF 2. 30Hz

S9 : HIGH FILTER
1. OFF 2. 8kHz

S10 : SPEAKERS
1. OFF 2. A 3. B 4. A+B

S11 : POWER
1. OFF 2. ON

7. DISASSEMBLY

1. Removing the Top Cover

Remove the 2 screws on each side of the top cover.

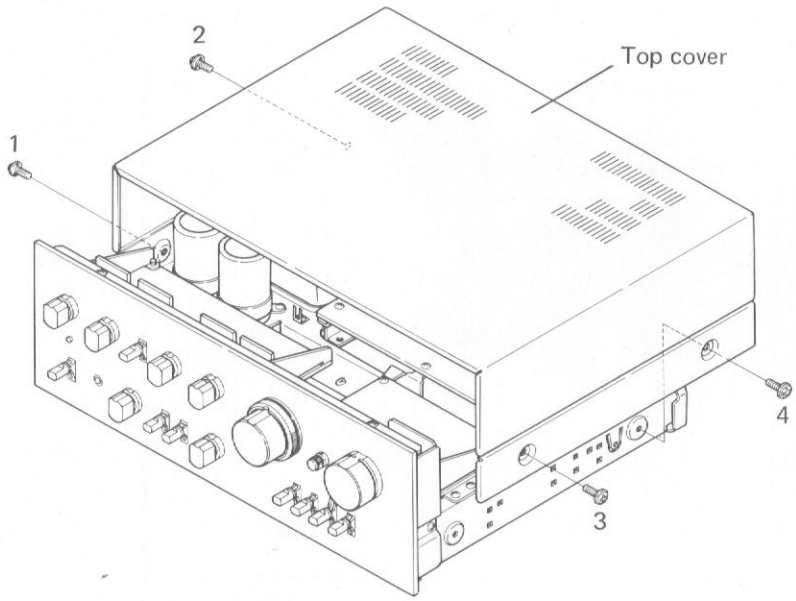

2. Removing the Front Panel

1. Remove all control knobs by pulling them out.
2. Remove the 2 screws each from the top and bottom edges of the front panel.

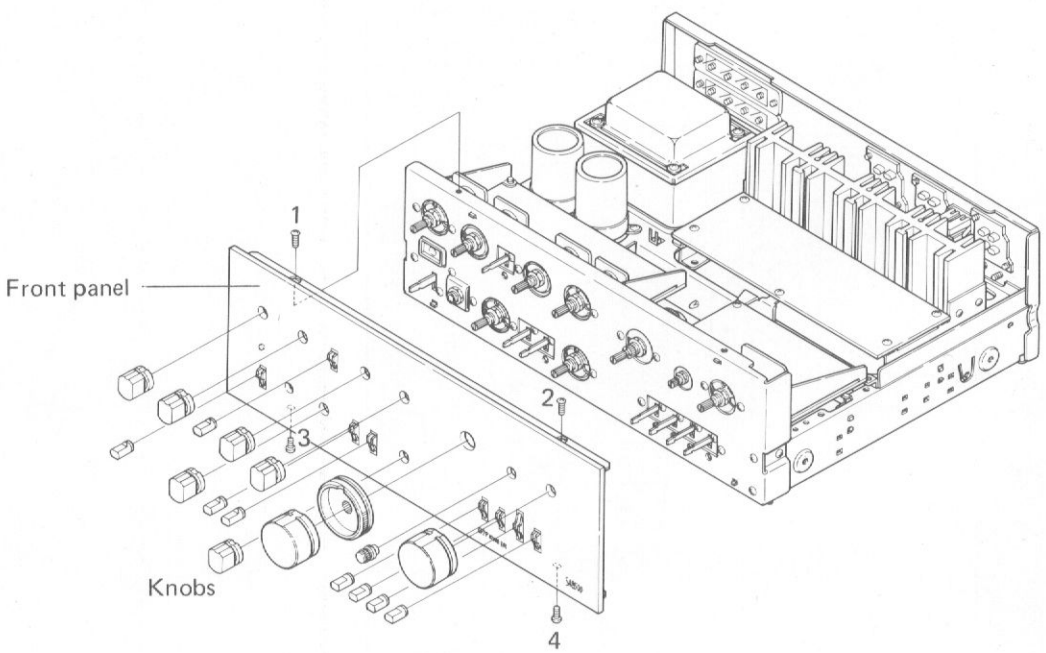

3. Removing the Bottom Plate

Remove the 10 screws to detach the bottom plate.

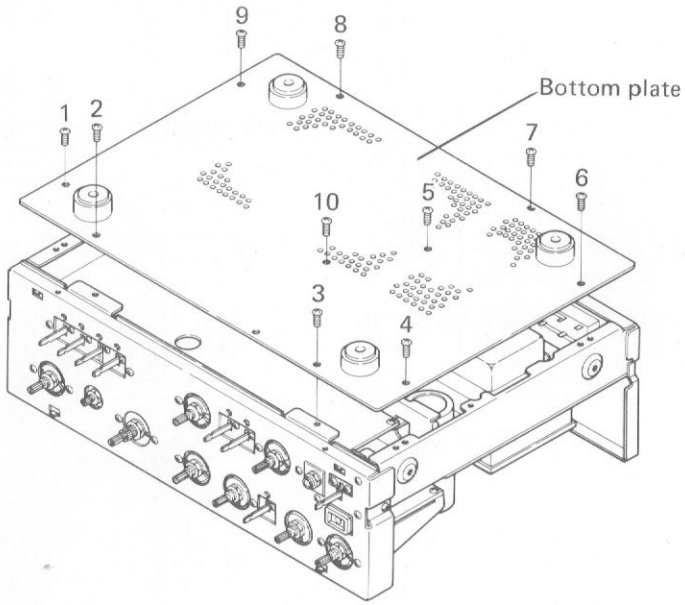

4. Removing the Equalizer Amplifier Assembly

1. Remove the top cover and front panel.
2. Remove the 5 screws which mount the printed circuit board on chassis.

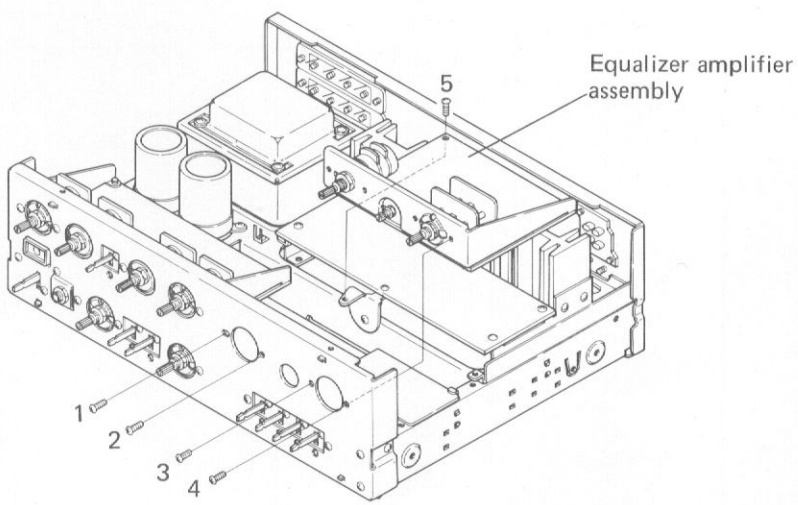

5. Removing the Control Amplifier Assembly

1. Remove the top cover and front panel.
2. Remove the 4 screws which mount the printed circuit board on chassis.

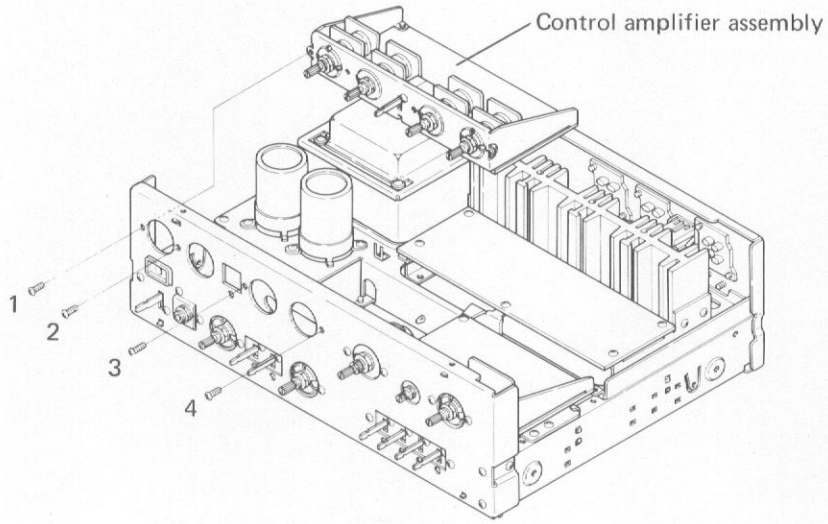

6. Removing the Power Amplifier Assembly

1. Remove the top cover and bottom plate.
2. Remove the 7 screws which mount the printed circuit board on chassis.

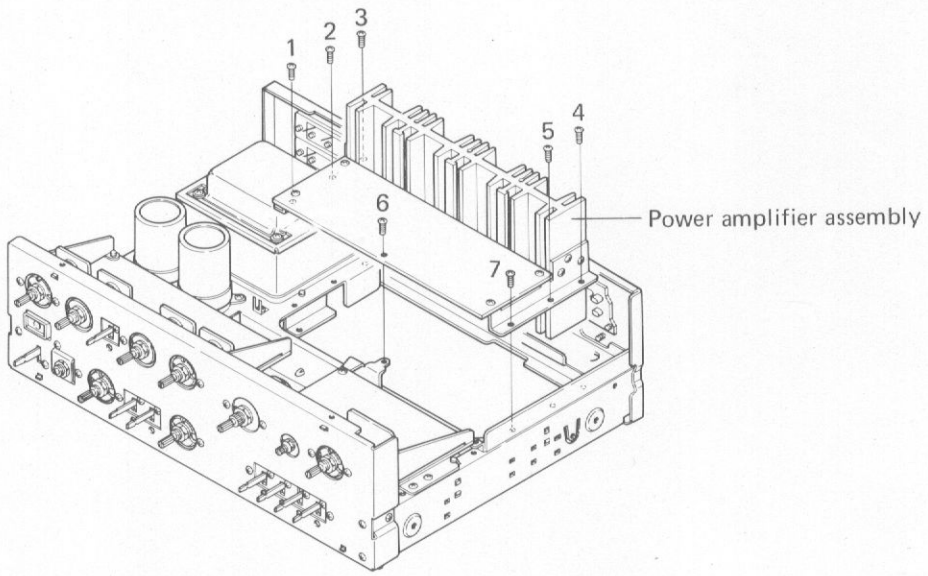

7. Removing the Switch Circuit Assembly

1. Remove the front panel and bottom plate.
2. Remove the 9 screws which mount the printed circuit board on the chassis.

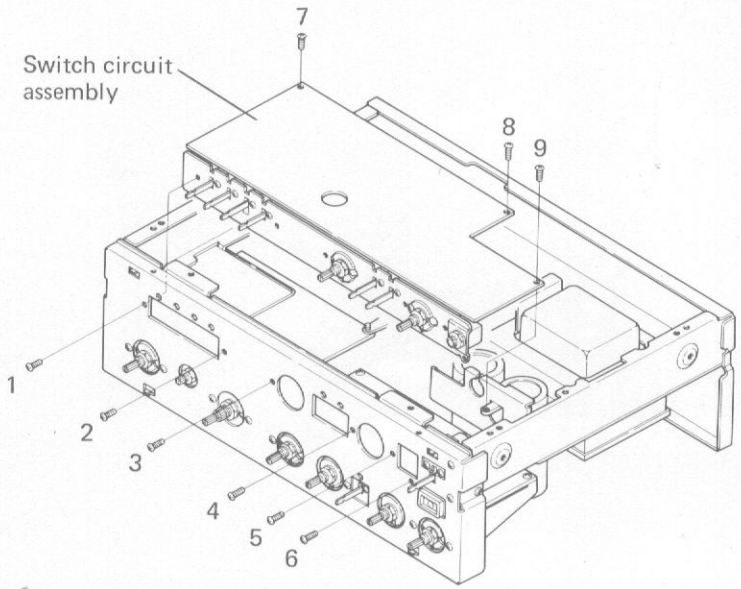

8. ADJUSTMENTS

Set-up

(a) Remove the top cover.
(b) Before turning on the POWER switch, turn VR1 and VR2 all the way to the left (counter-clockwise).
(c) For adjustment, wait 10 minutes after the POWER switch is turned on.

8.1 ADJUSTMENT FOR JUNCTION POINT

1. Connect as shown in Fig.8.
2. Adjust VR3 (left channel, VR4: for right channel) until the DC voltmeter indicates 0V.

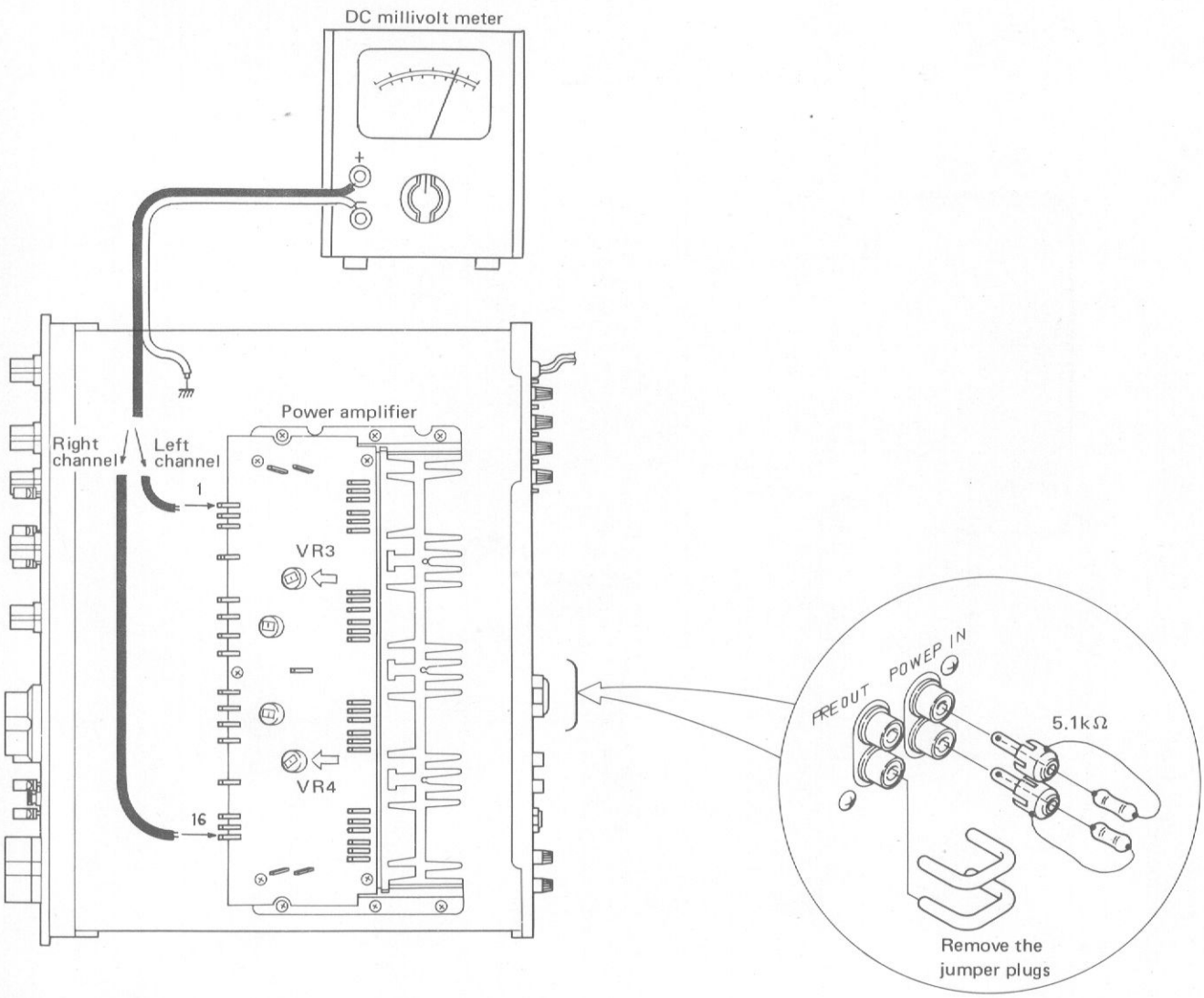

8.2 ADJUSTMENT FOR IDLE CURRENT

1. Connect as shown in Fig.9.
2. Adjust VR1 (left channel, VR2: for right channel) until the DC voltmeter indicates 30mV.

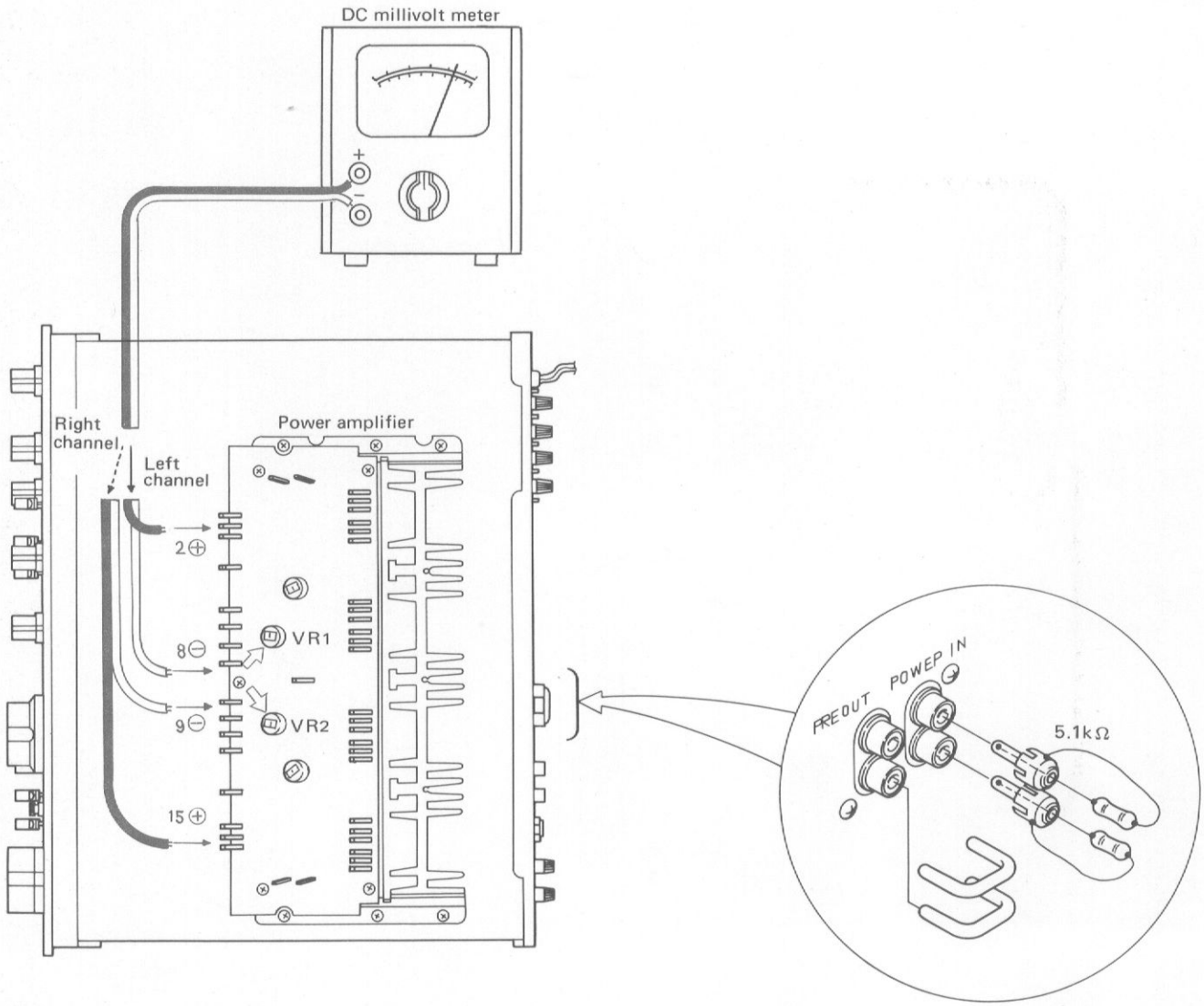

9. EXPLODED VIEW

NOTES:
Parts indicated in green type cannot be supplied.

The following symbols stand for screws as shown in Exploded Views on pp.19-27
RT..... Brazier head tapping screw

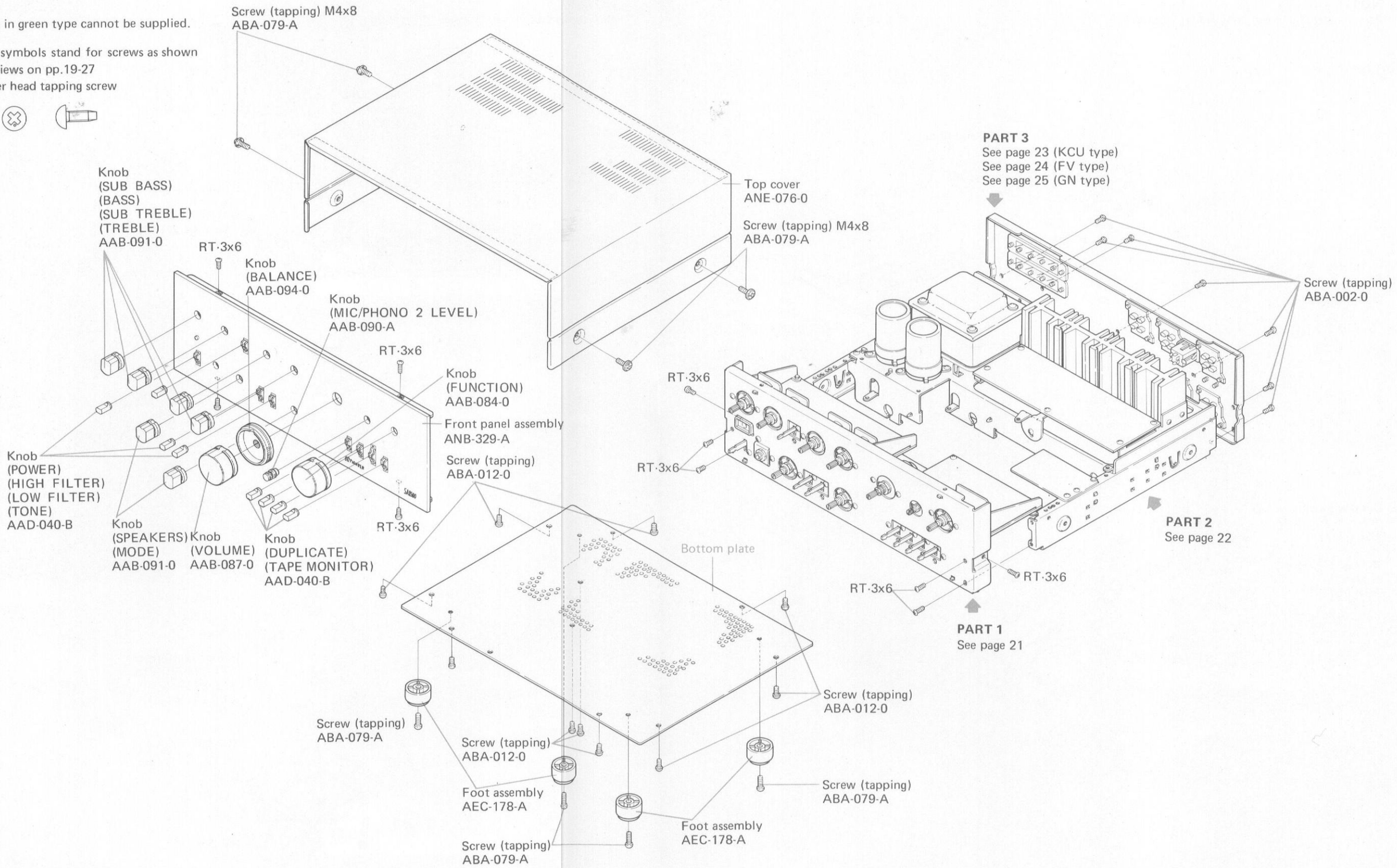

PART 1

NOTE:
Parts indicated in green type cannot be supplied.

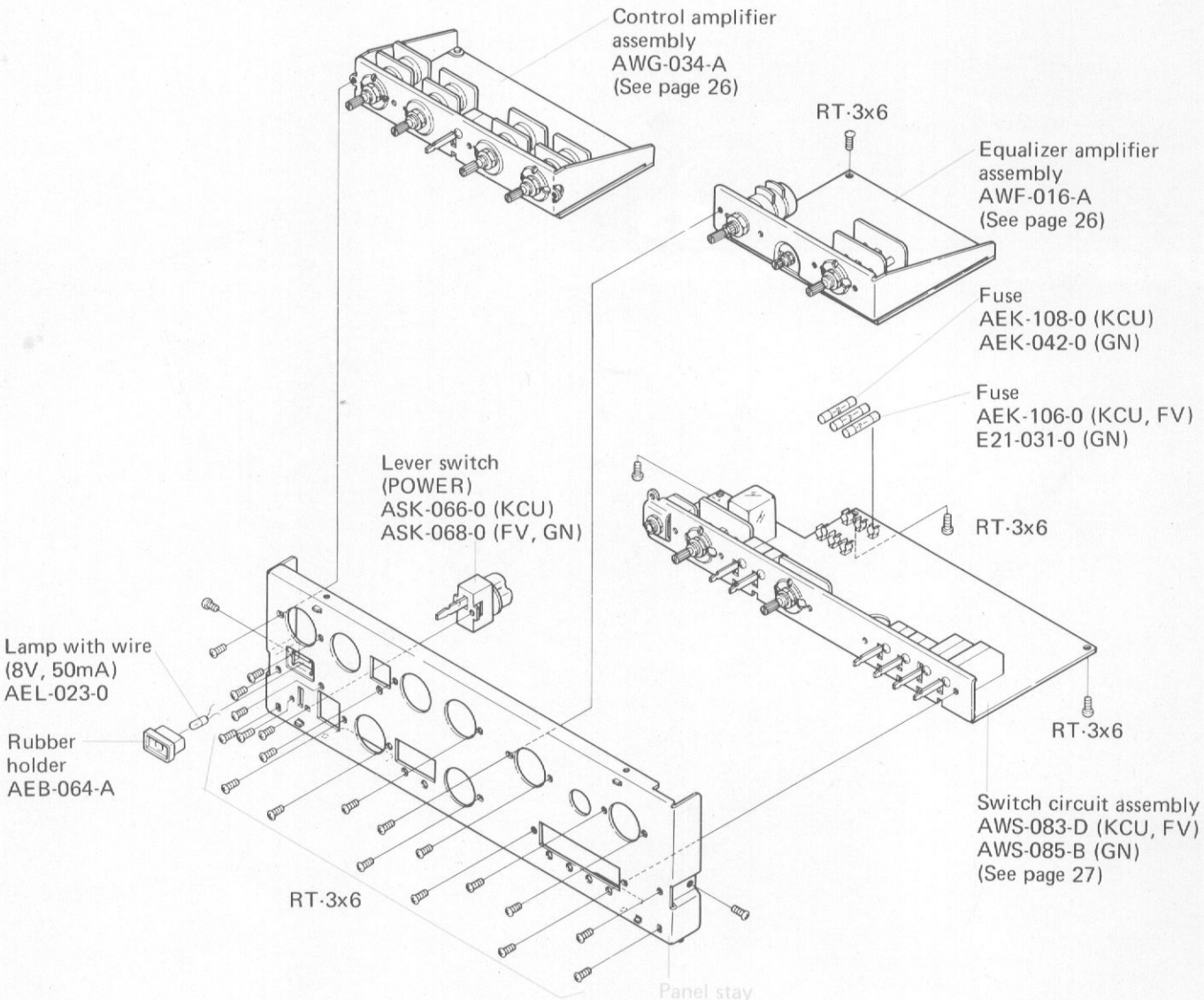

PART 2

NOTE:
Parts indicated in green type cannot be supplied.

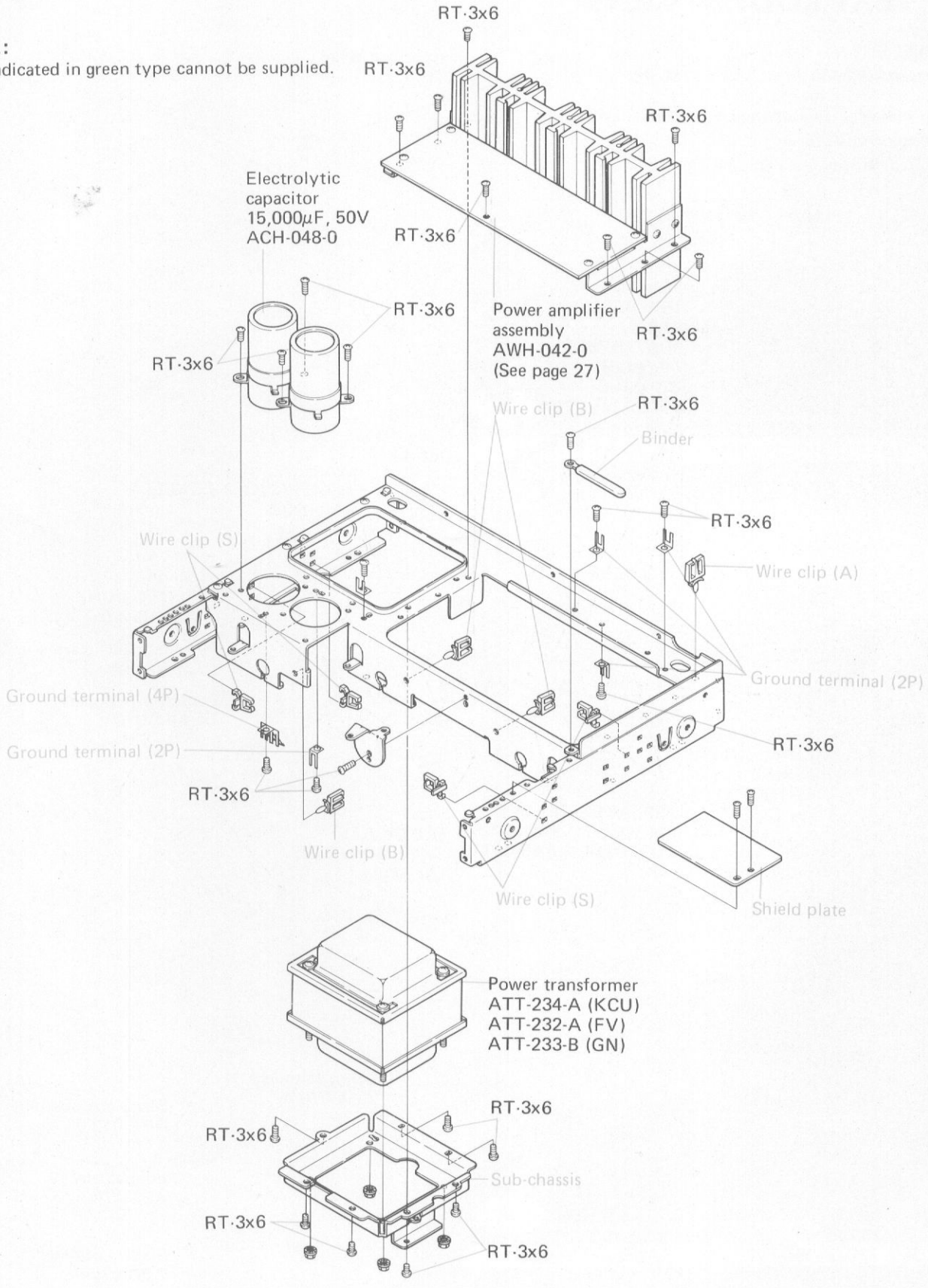

PART 3

For "KCU" type (120V model)

NOTE:
Parts indicated in green type cannot be supplied.

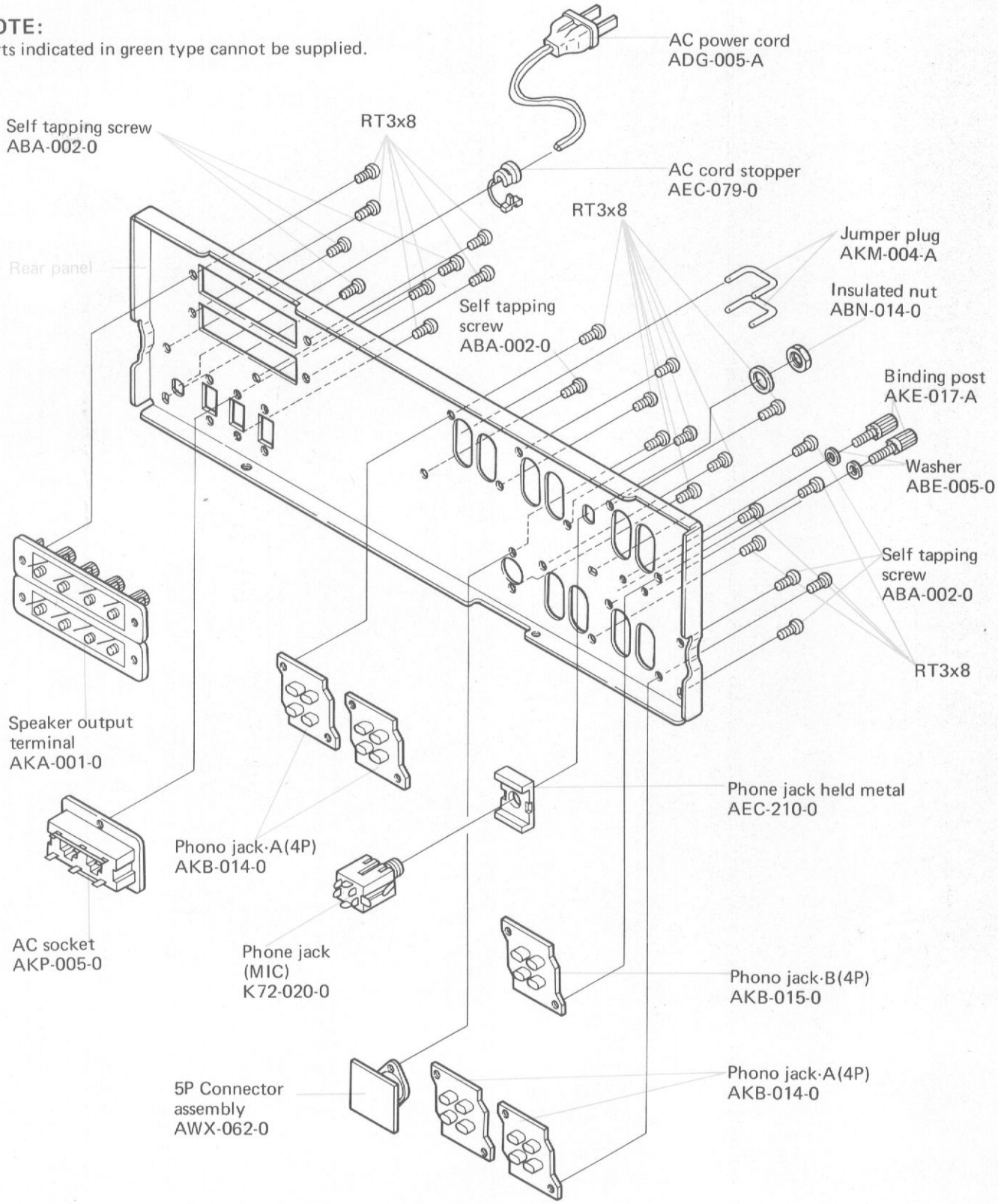

PART 3

For "FV" type (5-Voltage model)

NOTE:
Parts indicated in green type cannot be supplied.

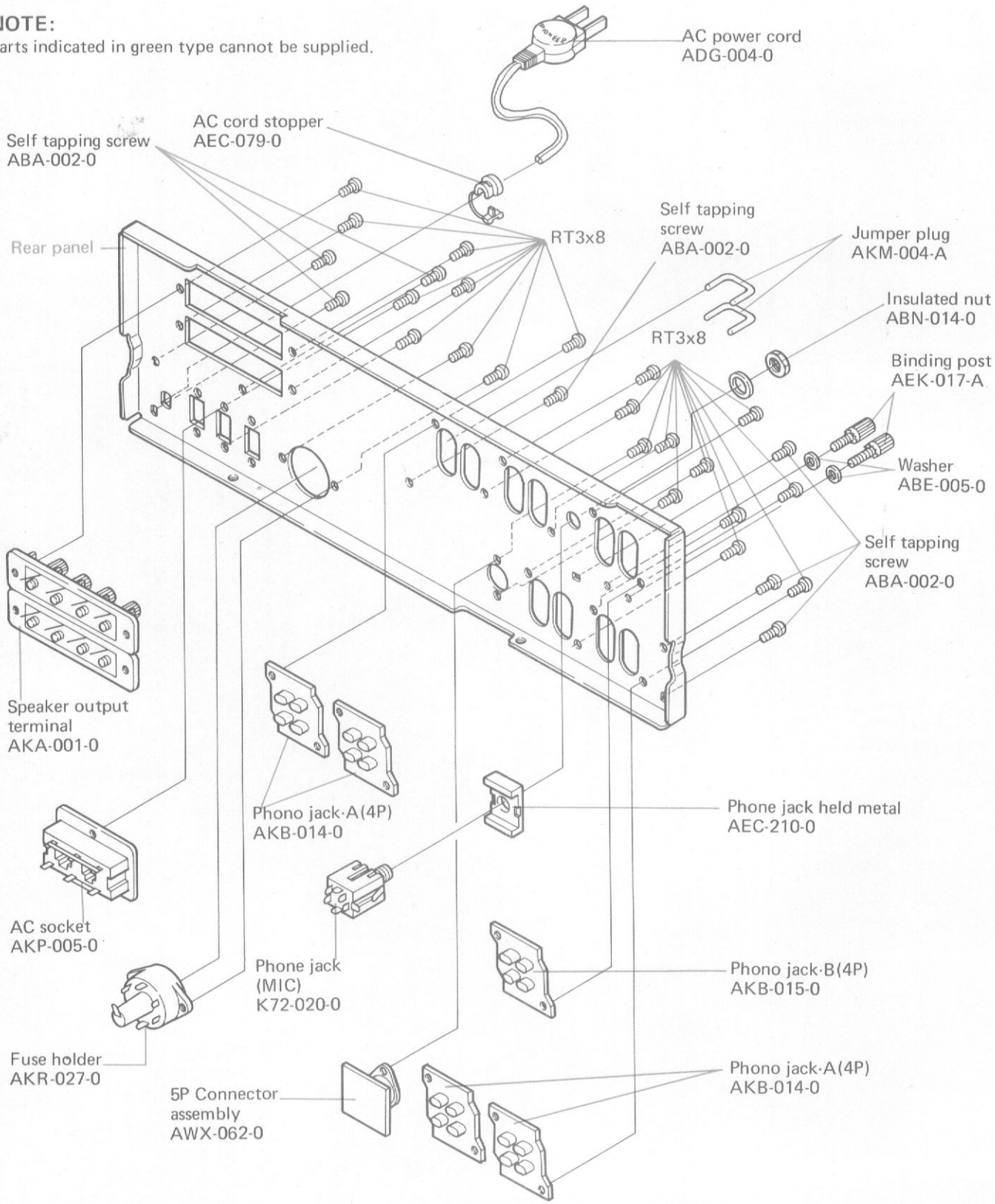

PART 3

For "GN" type (220V model)

NOTE:
Parts indicated in green type cannot be supplied.

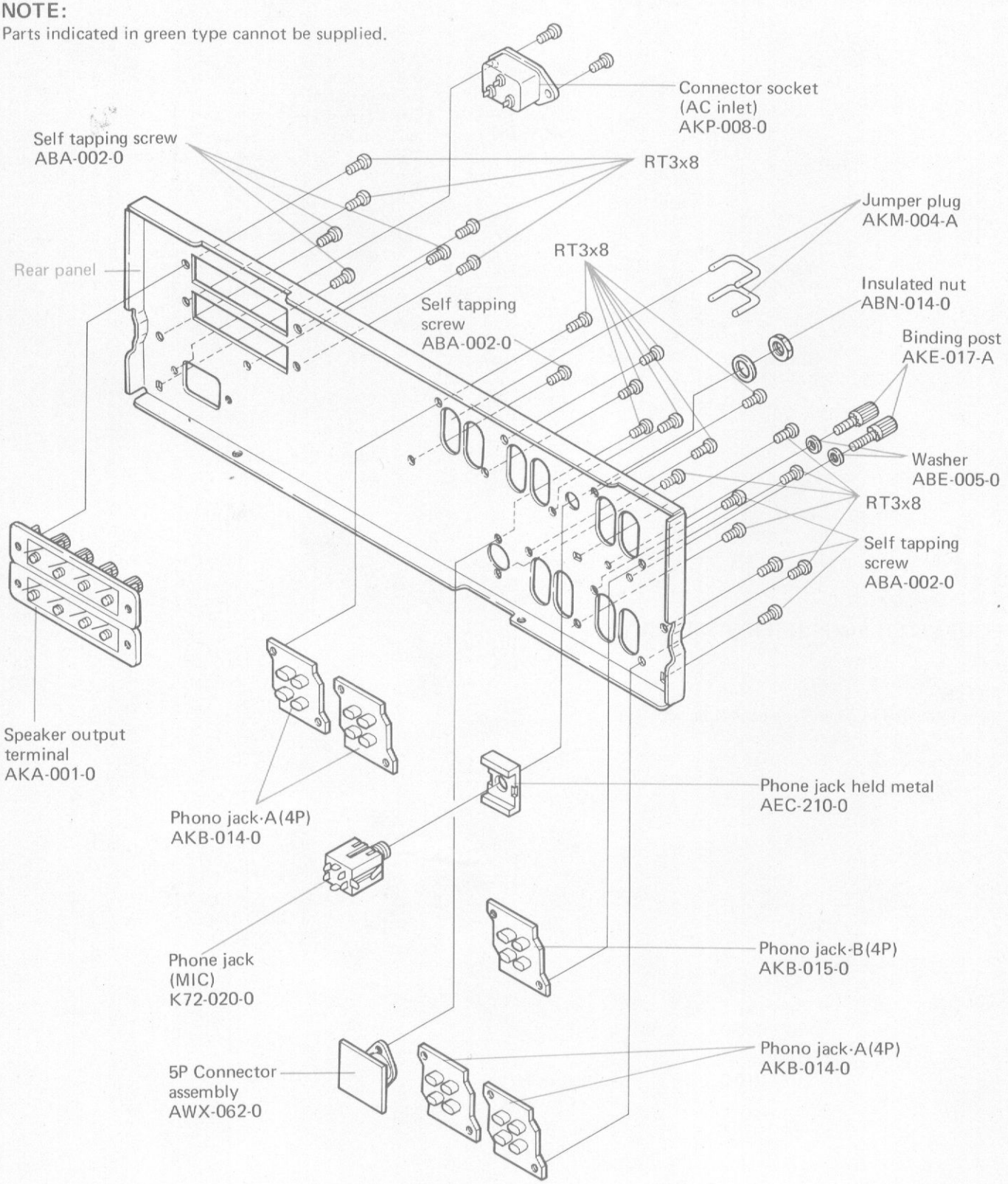

CONTROL AMPLIFIER ASSEMBLY

NOTE:
Parts indicated in green type cannot be supplied.

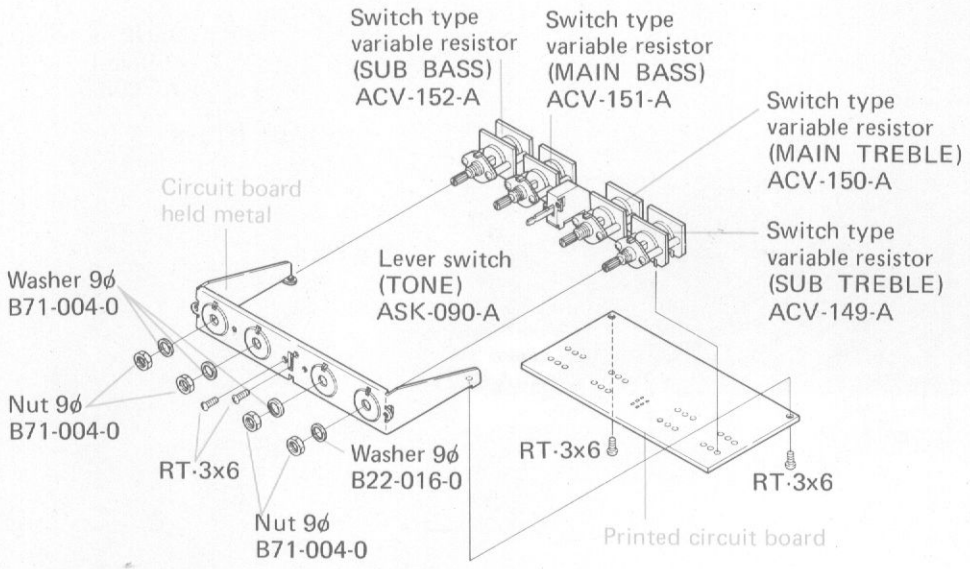

EQUALIZER AMPLIFIER ASSEMBLY

NOTE:
Parts indicated in green type cannot be supplied.

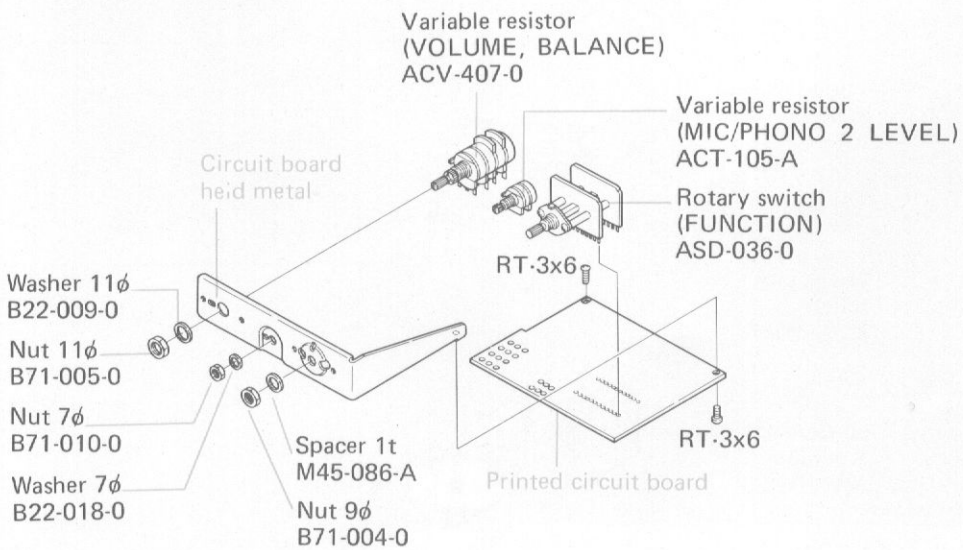

POWER AMPLIFIER ASSEMBLY

NOTE:
Parts indicated in green type cannot be supplied.

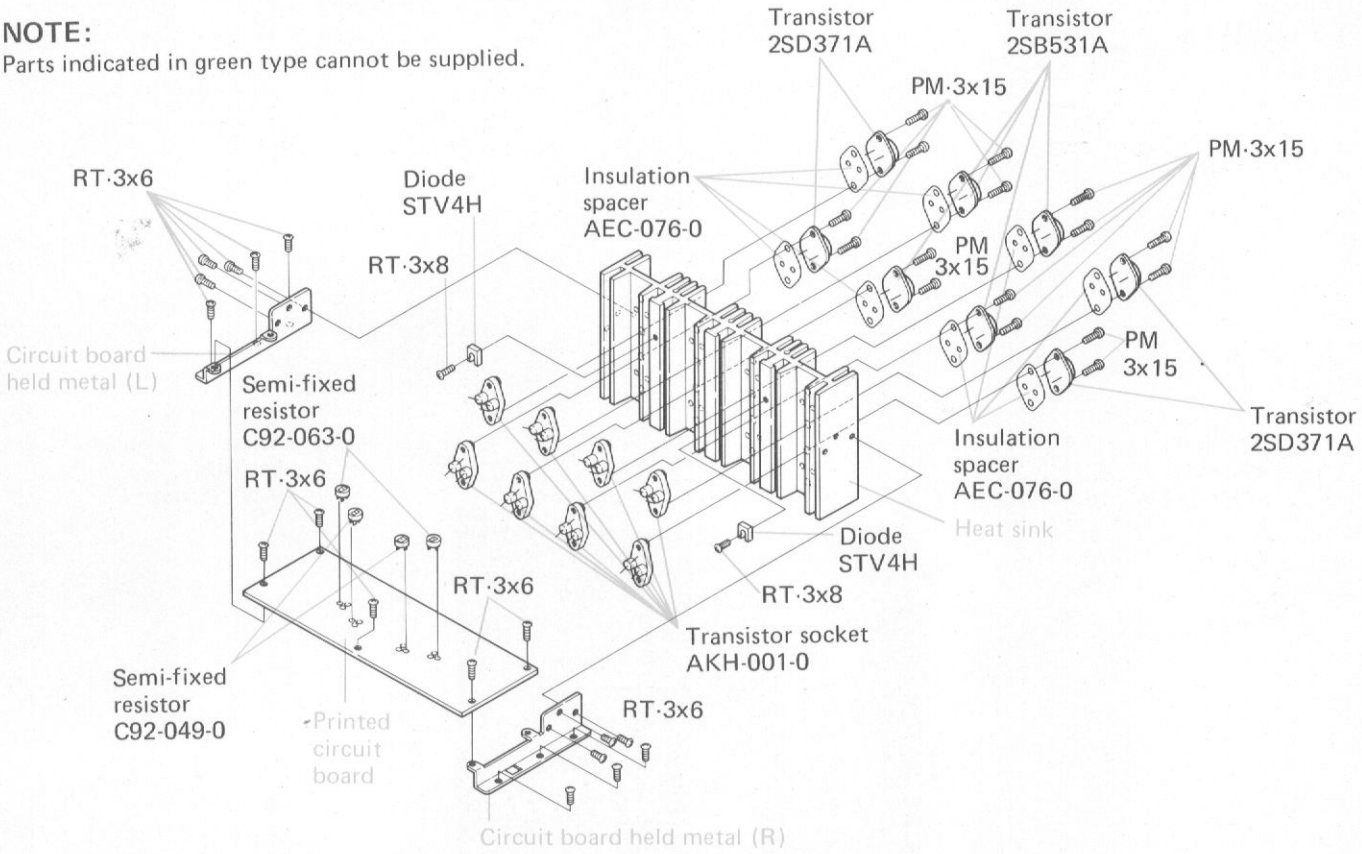

SWITCH CIRCUIT ASSEMBLY

NOTE:
Parts indicated in green type cannot be supplied.

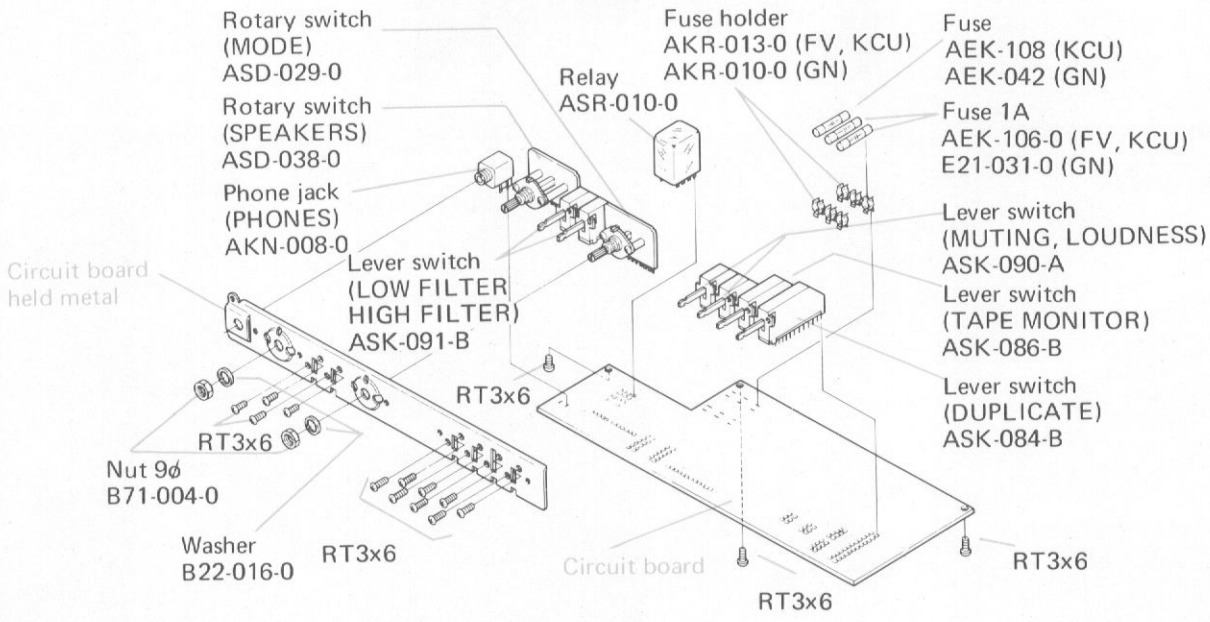

10. PARTS LOCATIONS

1. Top View

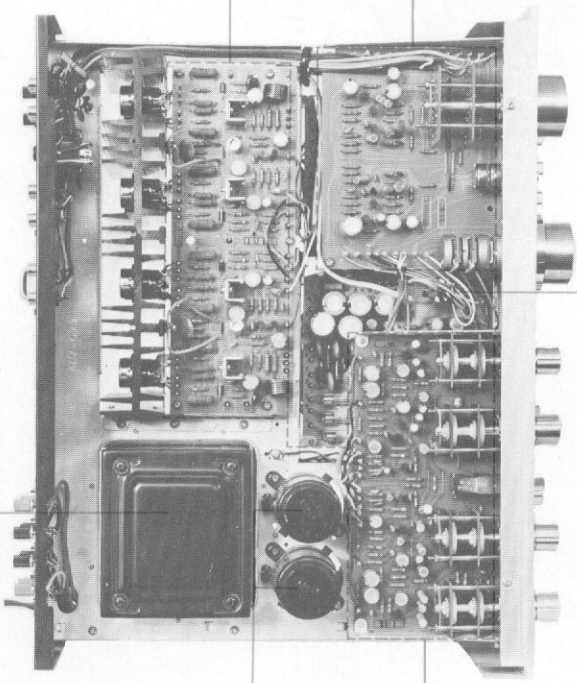

2. Front View

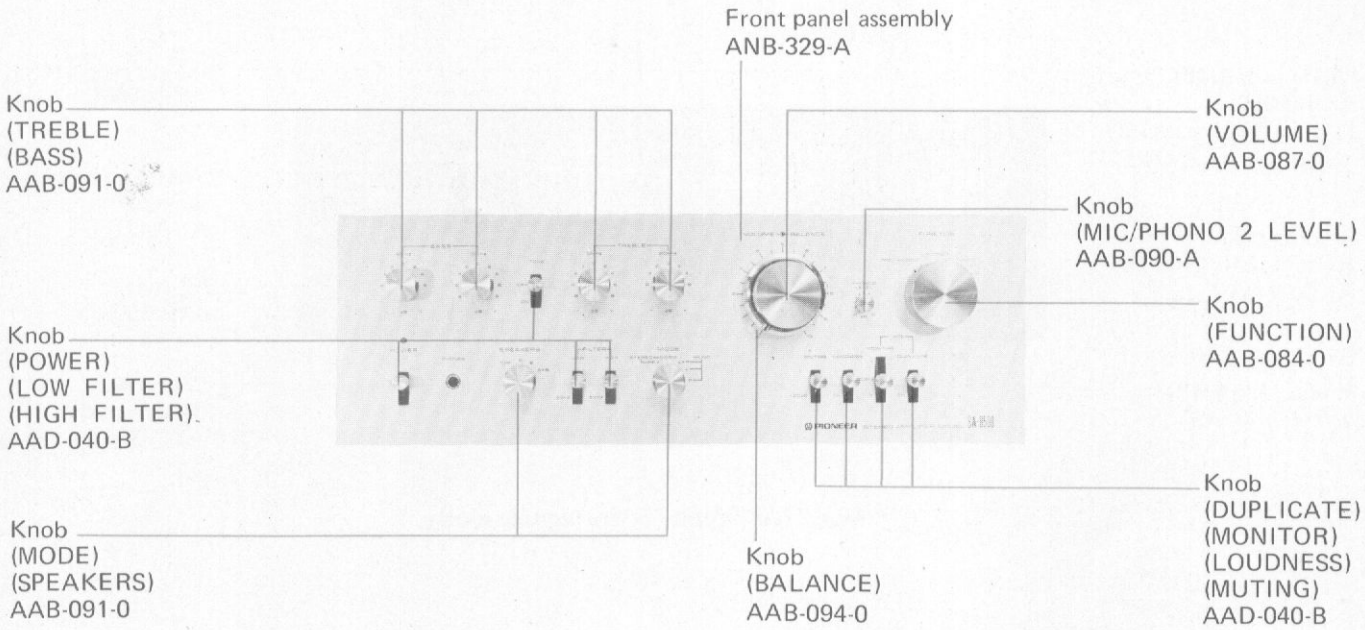

3. Front View with Panel Removed

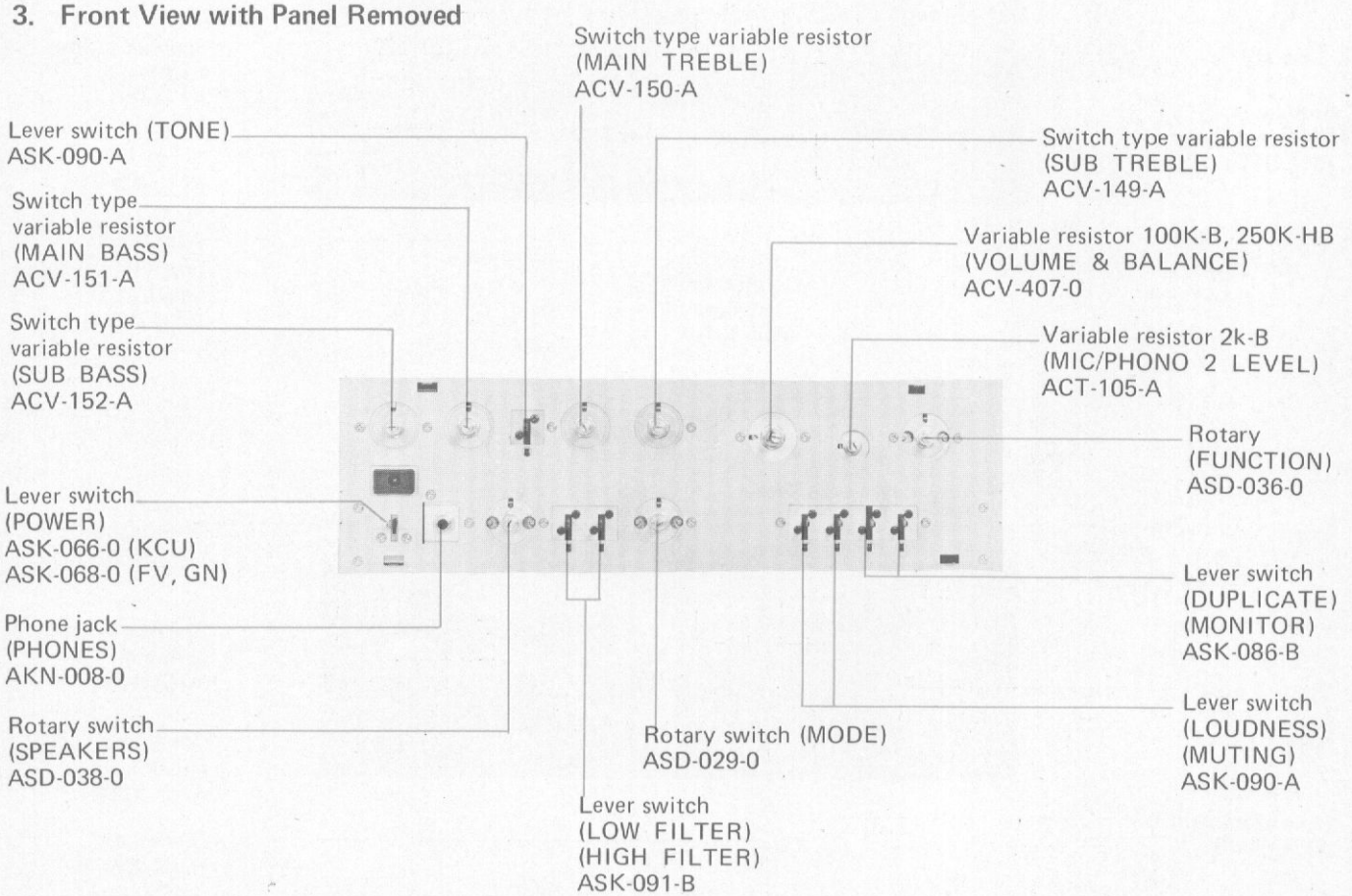

4. Rear View

For "KCU" type (120V model)

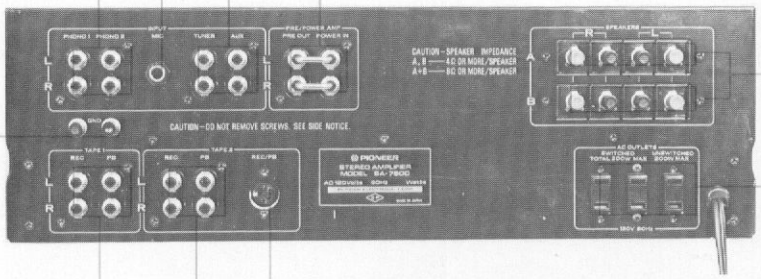

For "FV" type (5-Voltage model)

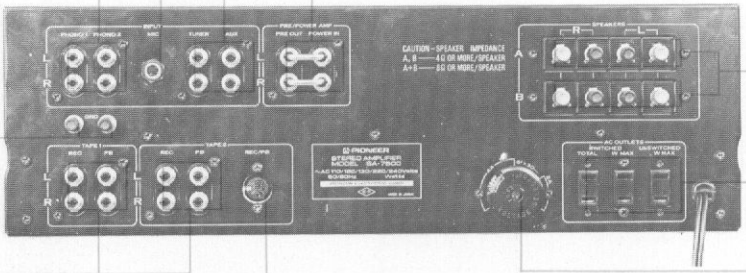

For "GN" type (220V model)

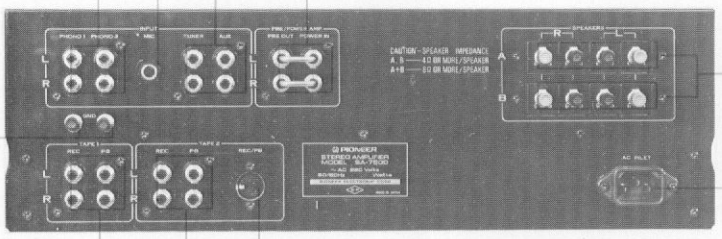

11. SCHEMATIC DIAGRAMS, P. C. BOARD PATTERNS AND PARTS LISTS

11.1 SCHEMATIC DIAGRAMS AND MISCELLANEOUS PARTS

Miscellaneous Parts List

For "KCU" type (120V model)

NOTE:

- *Capacitors: in μF unless otherwise noted p:pF*
- *Resistors: in Ω , ¼W unless otherwise noted k:kΩ, M:MΩ*

CAPACITORS

Symbol	Description			Part No.
C1	Electrolytic	15,000	50V	ACH-048-0
C2	Electrolytic	15,000	50V	ACH-048-0
C3	Ceramic	0.01	250V	ACG-003-0
C4	Ceramic	0.01	250V	ACG-003-0
C5	Ceramic	0.047	50V	CKDYF 473Z 50
C6	Ceramic	0.047	50V	CKDYF 473Z 50
C7	Ceramic	0.047	50V	CKDYF 473Z 50
C8	Ceramic	0.047	50V	CKDYF 473Z 50
C9	Mylar	0.0047	50V	CQMA 472K 50
C10	Mylar	0.0027	50V	CQMA 272K 50
C11				
C12	Ceramic	0.047	50V	CKDYF 473Z 50

RESISTORS

Symbol	Description			Part No.
R1	Metal oxide	4.7k	2W	RS2P 472J
R2	Metal oxide	4.7k	2W	RS2P 472J
R3	Carbon film	39k		RD¼PS 393J

SEMICONDUCTORS

Symbol	Description	Part No.
Q11	Transistor 2SD371A-0 or R (2SC1619A-0 or Y)	
Q12	Transistor 2SD371A-0 or R (2SC1619A-0 or Y)	
Q13	Transistor 2SB531A-0 or R (2SA808A-0 or Y)	
Q14	Transistor 2SB531A-0 or R (2SA808A-0 or Y)	
Q15	Transistor 2SD371A-0 or R (2SC1619A-0 or Y)	
Q16	Transistor 2SD371A-0 or R (2SC1619A-0 or Y)	
Q17	Transistor 2SB531A-0 or R (2SA808A-0 or Y)	
Q18	Transistor 2SB531A-0 or R (2SA808A-0 or Y)	

OTHERS

Symbol	Description		Part No.
FU1	Fuse (secondary)	1A	AEK-106-0
FU2	Fuse (secondary)	1A	AEK-106-0
FU3	Fuse (primary)	5A	AEK-108-0
PL1	Lamp with wire	8V 50mA	AEL-023-0
S11	Lever switch (POWER)		ASK-066-0
T1	Power transformer		ATT-234-A

For "FV" type (5-Voltage model)

CAPACITORS

Symbol	Description			Part No.
C1	Electrolytic	15,000	50V	ACH-048-0
C2	Electrolytic	15,000	50V	ACH-048-0
C3	Ceramic	0.01	250V	ACG-001-0
C4	Ceramic	0.01	250V	ACG-001-0
C5	Ceramic	0.047	50V	CKDYF 473Z 50
C6	Ceramic	0.047	50V	CKDYF 473Z 50
C7	Ceramic	0.047	50V	CKDYF 473Z 50
C8	Ceramic	0.047	50V	CKDYF 473Z 50
C9	Mylar	0.0047	50V	CQMA 472K 50
C10	Mylar	0.0027	50V	CQMA 272K 50
C11	Ceramic	0.01	250V	ACG-001-0
C12	Ceramic	0.047	50V	CKDYF 473Z 50

RESISTORS

Symbol	Description			Part No.
R1	Metal oxide	4.7k	2W	RS2P 472J
R2	Metal oxide	4.7k	2W	RS2P 472J
R3	Carbon film	39k		RD¼PS 393J

SEMICONDUCTORS

Symbol	Description		Part No.
Q11	Transistor	2SD371A-0 or R (2SC1619A-0 or Y)	
Q12	Transistor	2SD371A-0 or R (2SC1619A-0 or Y)	
Q13	Transistor	2SB531A-0 or R (2SA808A-0 or Y)	
Q14	Transistor	2SB531A-0 or R	
Q15	Transistor	2SD371A-0 or R (2SC1619A-0 or Y)	
Q16	Transistor	2SD371A-0 or R (2SC1619A-0 or Y)	
Q17	Transistor	2SB531A-0 or R (2SA808A-0 or Y)	
Q18	Transistor	2SB531A-0 or R (2SA808A-0 or Y)	

OTHERS

Symbol	Description		Part No.
FU1	Fuse (secondary)	1A	AEK-106-0
FU2	Fuse (secondary)	1A	AEK-106-0
FU3	Fuse (primary)	2.5A	AEK-102-0
PL1	Lamp with wires	8V 50mA	AEL-023-0
S11	Lever switch (POWER)		ASK-068-0
T1	Power transformer		ATT-232-A

For "GN" type (220V model)

CAPACITORS

Symbol	Description			Part No.
C1	Electrolytic	15,000	50V	ACH-048-0
C2	Electrolytic	15,000	50V	ACH-048-0
C3				
C4	Ceramic	0.01	250V	ACG-001-0
C5	Ceramic	0.047	50V	CKDYF 473Z 50
C6	Ceramic	0.047	50V	CKDYF 473Z 50
C7	Ceramic	0.047	50V	CKDYF 473Z 50
C8	Ceramic	0.047	50V	CKDYF 473Z 50
C9	Mylar	0.0047	50V	CQMA 472K 50
C10	Mylar	0.0027	50V	CQMA 272K 50
C11				
C12	Ceramic	0.047	50V	CKDYF 473Z 50

RESISTORS

Symbol	Description			Part No.
R1	Metal oxide	4.7k	2W	RS2P 472J
R2	Metal oxide	4.7k	2W	RS2P 472J
R3	Carbon film	39k		RD¼PS 393J

SEMICONDUCTORS

Symbol	Description		Part No.
Q11	Transistor	2SD371A-0 or R (2SC1619A-0 or Y)	
Q12	Transistor	2SD371A-0 or R (2SC1619A-0 or Y)	
Q13	Transistor	2SB531A-0 or R (2SA808A-0 or Y)	
Q14	Transistor	2SB531A-0 or R (2SA808A-0 or Y)	
Q15	Transistor	2SD371A-0 or R (2SC1619A-0 or Y)	
Q16	Transistor	2SD371A-0 or R (2SC1619A-0 or Y)	
Q17	Transistor	2SB531A-0 or R (2SA808A-0 or Y)	
Q18	Transistor	2SB531A-0 or R (2SA808A-0 or Y)	

OTHERS

Symbol	Description		Part No.
FU1	Fuse (secondary)	1A	E21-031-0
FU2	Fuse (secondary)	1A	E21-031-0
FU3	Fuse (primary)	3.15A	AEK-042-0
PL1	Lamp with wires	8V 50mA	AEL-023-0
S11	Lever switch (POWER)		ASK-068-0
T1	Power transformer		ATT-233-B

For "KCU" type (120V model)

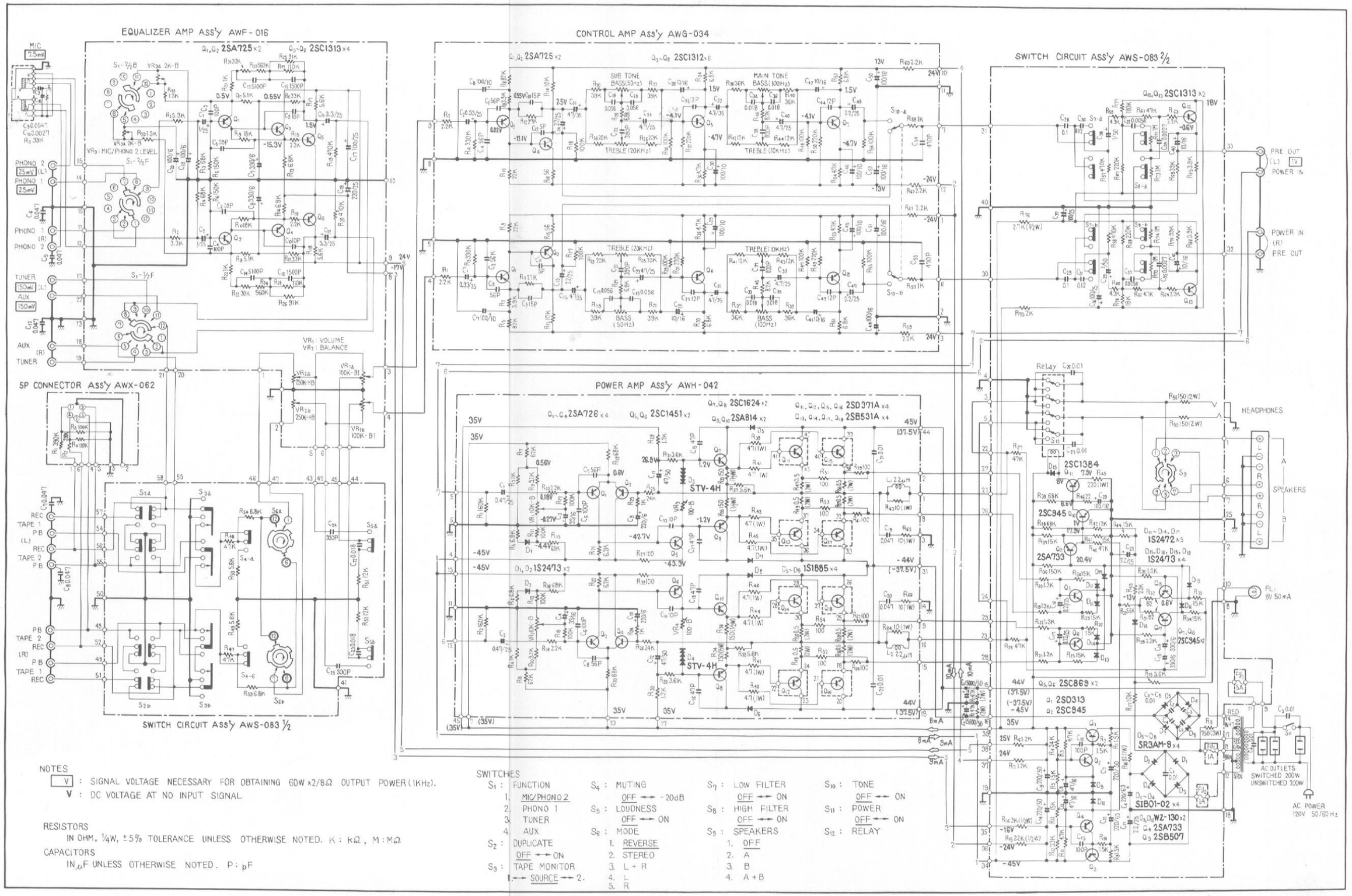

NOTES

V : SIGNAL VOLTAGE NECESSARY FOR OBTAINING 60W x2/8Ω OUTPUT POWER (1KHz).

V : DC VOLTAGE AT NO INPUT SIGNAL

RESISTORS

IN OHM, ¼W, ±5% TOLERANCE UNLESS OTHERWISE NOTED. K : kΩ, M : MΩ

CAPACITORS

IN μF UNLESS OTHERWISE NOTED. P : pF

SWITCHES

- S_1 : FUNCTION — 1. MIC/PHONO 2, 2. PHONO 1, 3. TUNER, 4. AUX
- S_2 : DUPLICATE — OFF ⟷ ON
- S_3 : TAPE MONITOR — 1. ⟷ SOURCE ⟷ 2.
- S_4 : MUTING — OFF ⟷ -20dB
- S_5 : LOUDNESS — OFF ⟷ ON
- S_6 : MODE — 1. REVERSE, 2. STEREO, 3. L + R, 4. L, 5. R
- S_7 : LOW FILTER — OFF ⟷ ON
- S_8 : HIGH FILTER — OFF ⟷ ON
- S_9 : SPEAKERS — 1. OFF, 2. A, 3. B, 4. A + B
- S_{10} : TONE — OFF ⟷ ON
- S_{11} : POWER — OFF ⟷ ON
- S_{12} : RELAY

For "FV" type (5-Voltage model)

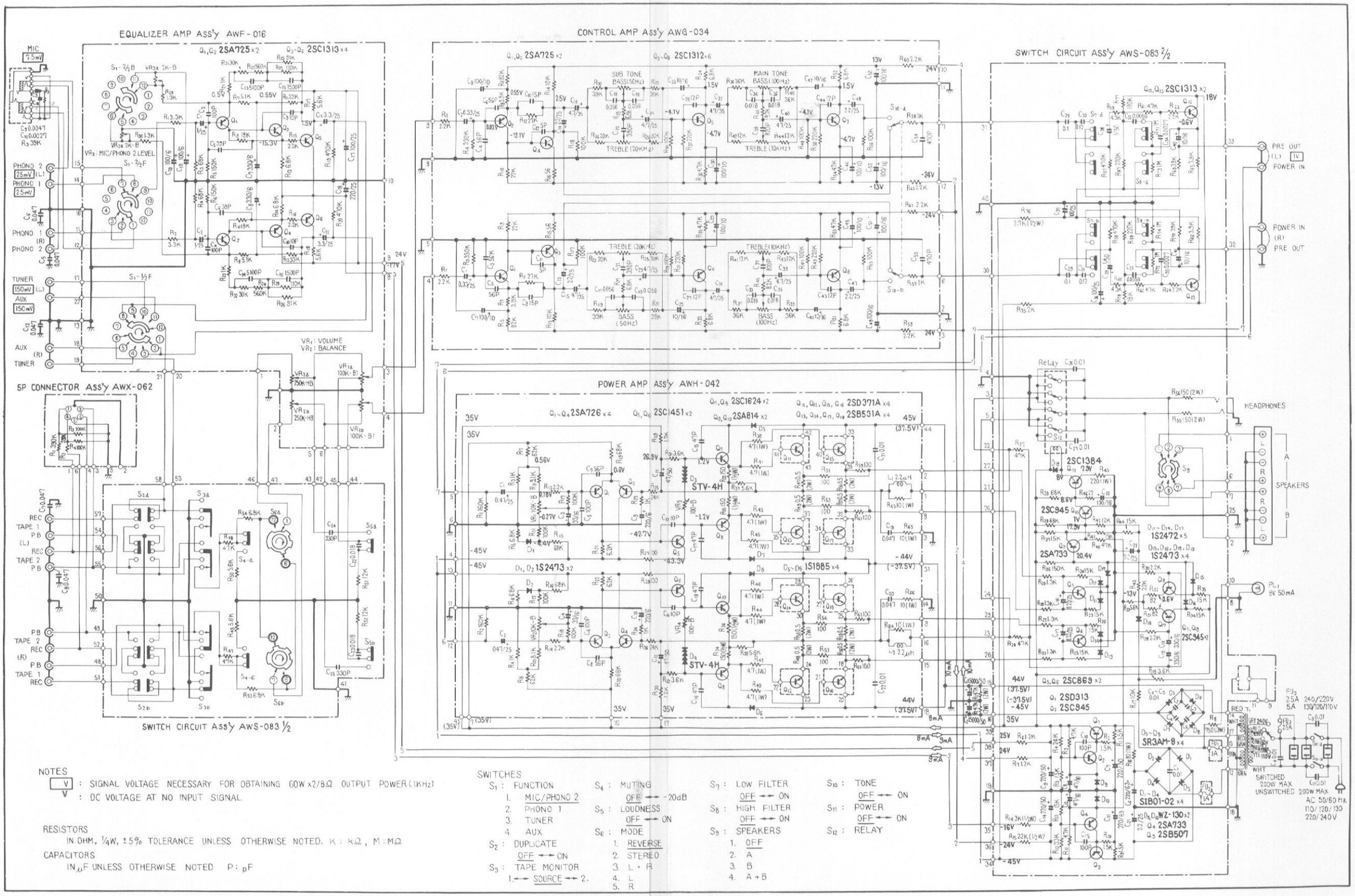

NOTES

V : SIGNAL VOLTAGE NECESSARY FOR OBTAINING 60W x2/8Ω OUTPUT POWER (1KHz)

V : DC VOLTAGE AT NO INPUT SIGNAL

RESISTORS

IN OHM, 1/4W, ±5% TOLERANCE UNLESS OTHERWISE NOTED. K : kΩ, M : MΩ

CAPACITORS

IN μF UNLESS OTHERWISE NOTED P : pF

SWITCHES

S_1 : FUNCTION
1. MIC/PHONO 2
2. PHONO 1
3. TUNER
4. AUX

S_2 : DUPLICATE
OFF ⟷ ON

S_3 : TAPE MONITOR
1. ⟷ SOURCE ⟷ 2.

S_4 : MUTING
OFF ⟷ -20dB

S_5 : LOUDNESS
OFF ⟷ ON

S_6 : MODE
1. REVERSE
2. STEREO
3. L + R
4. L
5. R

S_7 : LOW FILTER
OFF ⟷ ON

S_8 : HIGH FILTER
OFF ⟷ ON

S_9 : SPEAKERS
1. OFF
2. A
3. B
4. A + B

S_{10} : TONE
OFF ⟷ ON

S_{11} : POWER
OFF ⟷ ON

S_{12} : RELAY

For "GN" type (220-V model)

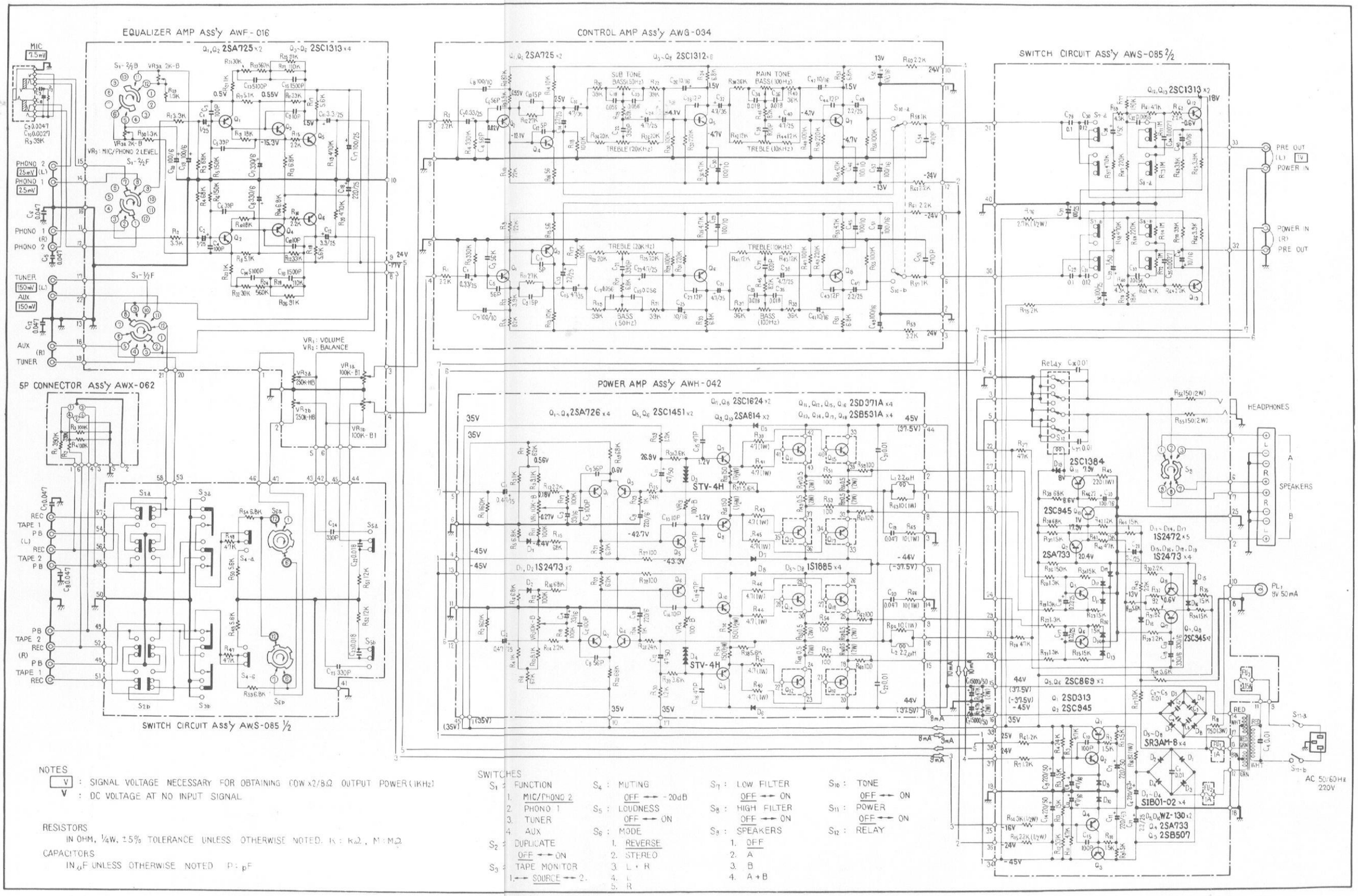

NOTES

V : SIGNAL VOLTAGE NECESSARY FOR OBTAINING 50W x2/8Ω OUTPUT POWER (1KHz)

V : DC VOLTAGE AT NO INPUT SIGNAL

RESISTORS

IN OHM, ¼W, ±5% TOLERANCE UNLESS OTHERWISE NOTED. K: KΩ, M: MΩ

CAPACITORS

IN μF UNLESS OTHERWISE NOTED P: pF

SWITCHES

S1 : FUNCTION — 1. MIC/PHONO 2, 2. PHONO 1, 3. TUNER, 4. AUX

S2 : DUPLICATE — OFF ⟷ ON

S3 : TAPE MONITOR — 1. ⟷ SOURCE ⟷ 2.

S4 : MUTING — OFF ⟷ -20dB

S5 : LOUDNESS — OFF ⟷ ON

S6 : MODE — 1. REVERSE, 2. STEREO, 3. L+R, 4. L, 5. R

S7 : LOW FILTER — OFF ⟷ ON

S8 : HIGH FILTER — OFF ⟷ ON

S9 : SPEAKERS — 1. OFF, 2. A, 3. B, 4. A+B

S10 : TONE — OFF ⟷ ON

S11 : POWER — OFF ⟷ ON

S12 : RELAY

11.2 EQUALIZER AMPLIFIER ASSEMBLY (AWF-016-A)

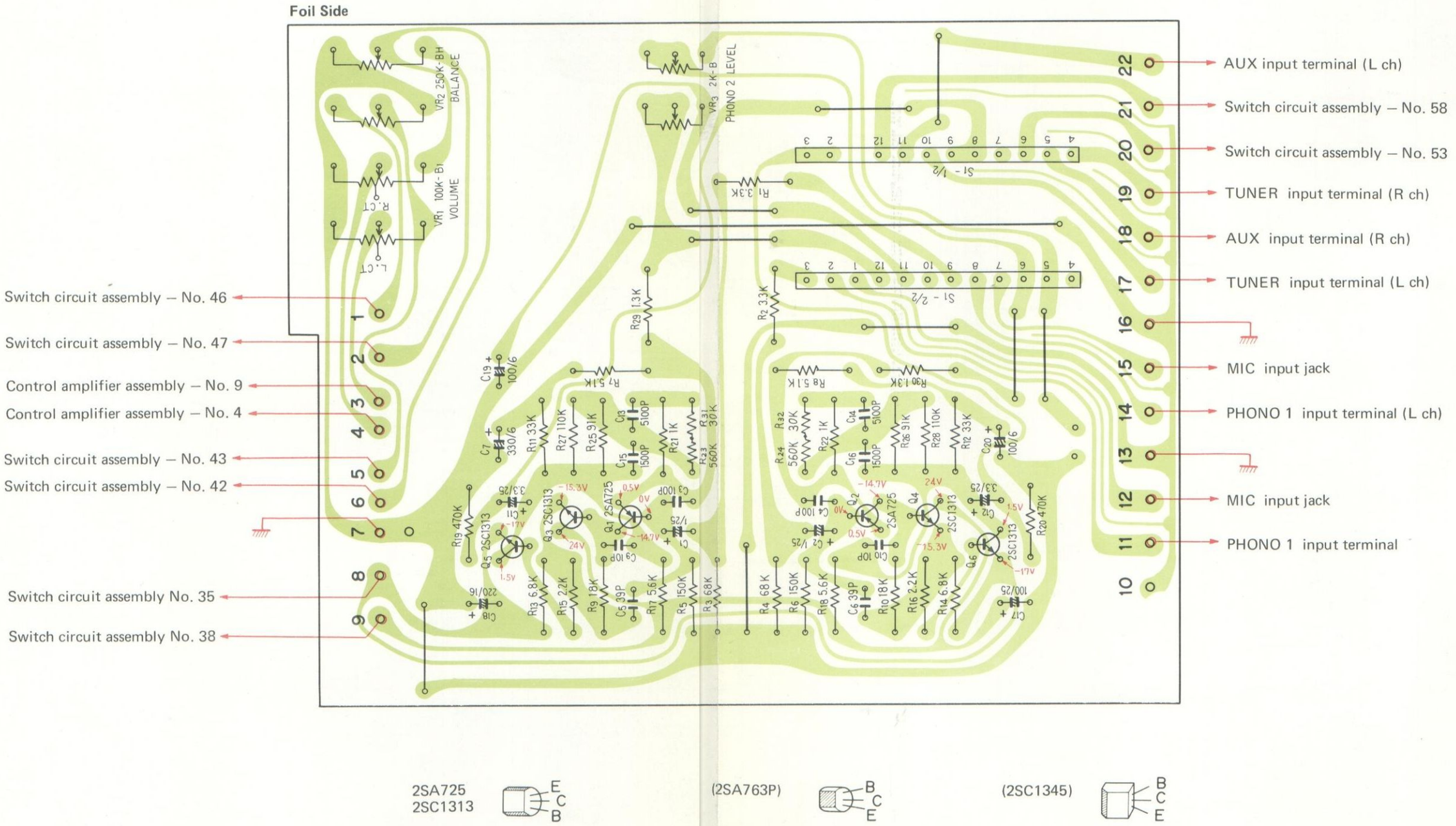

2SA725
2SC1313

(2SA763P)

(2SC1345)

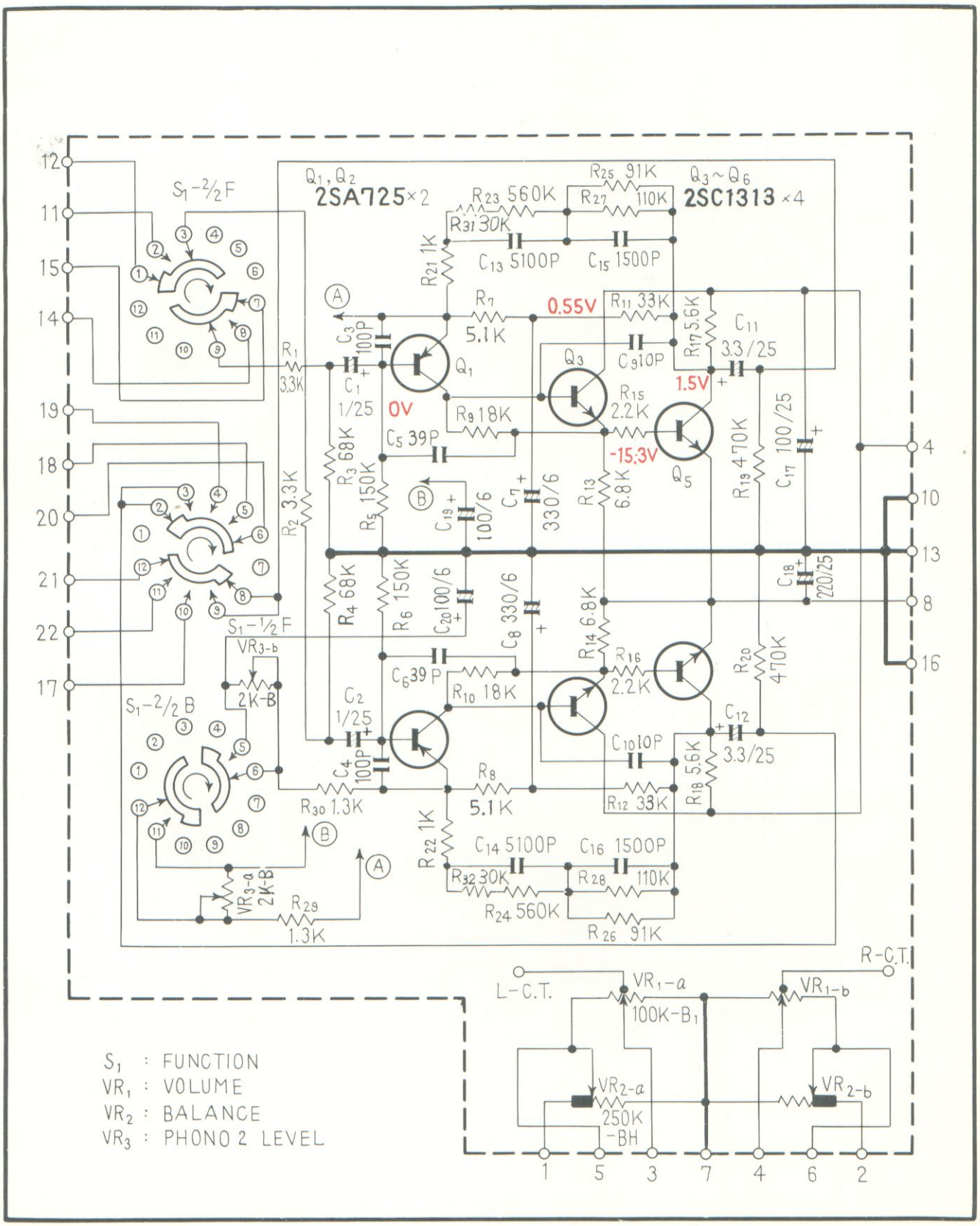
Q1, Q2
2SA725×2
Q3~Q6
2SC1313×4
S1-2/2F
S1-1/2F
S1-2/2B
R1 3.3K
R2 3.3K
R3 68K
R4 68K
R5 150K
R6 150K
R7 5.1K
R8 5.1K
R9 18K
R10 18K
R11 33K
R12 33K
R13 6.8K
R14 6.8K
R15 2.2K
R16 2.2K
R17 5.6K
R18 5.6K
R19 470K
R20 470K
R21 1K
R22 1K
R23 560K
R24 560K
R25 91K
R26 91K
R27 110K
R28 110K
R29 1.3K
R30 1.3K
R31 30K
R32 30K
C1 1/25
C2 1/25
C3 100P
C4 100P
C5 39P
C6 39P
C7 330/6
C8 330/6
C9 10P
C10 10P
C11 3.3/25
C12 3.3/25
C13 5100P
C14 5100P
C15 1500P
C16 1500P
C17 100/25
C18 220/25
C19 100/6
C20 100/6
VR3-b 2K-B
VR3-a 2K-B
0V
0.55V
1.5V
-15.3V
Q1
Q3
Q5
L-C.T.
R-C.T.
VR1-a 100K-B1
VR1-b
VR2-a 250K-BH
VR2-b
1 5 3 7 4 6 2
S1 : FUNCTION
VR1 : VOLUME
VR2 : BALANCE
VR3 : PHONO 2 LEVEL

Parts List of Equalizer Amplifier Assembly (AWF-016-A)

CAPACITORS

Symbol	Description			Part No.
C1	Electrolytic	1	25V	CSSA 010M 25
C2	Electrolytic	1	25V	CSSA 010M 25
C3	Ceramic	100p	50V	CCDSL 101K 50
C4	Ceramic	100p	50V	CCDSL 101K 50
C5	Ceramic	39p	50V	CCDSL 390K 50
C6	Ceramic	39p	50V	CCDSL 390K 50
C7	Electrolytic	330	6V	CEA 331P 6
C8	Electrolytic	330	6V	CEA 331P 6
C9	Ceramic	10p	50V	CCDSL 100D 50
C10	Ceramic	10p	50V	CCDSL 100D 50
C11	Electrolytic	3.3	25V	CEANL 3R3P 25
C12	Electrolytic	3.3	25V	CEANL 3R3P 25
C13	Styrol	5100p	50V	CQSA 512G 50
C14	Styrol	5100p	50V	CQSA 512G 50
C15	Styrol	1500p	50V	CQSA 152G 50
C16	Styrol	1500p	50V	CQSA 152G 50
C17	Electrolytic	100	25V	CEA 101P 25
C18	Electrolytic	220	25V	CEA 221P 25

RESISTORS

Symbol	Description		Part No.
R1	Carbon film	3.3k	RD¼PS 332J
R2	Carbon film	3.3k	RD¼PS 332J
R3	Carbon film	68k	RD¼PS 683J
R4	Carbon film	68k	RD¼PS 683J
R5	Carbon film	150k	RD¼PS 154J
R6	Carbon film	150k	RD¼PS 154J
R7	Carbon film	5.1k	RD¼PS 512JNL
R8	Carbon film	5.1K	RD¼PS 512JNL
R9	Carbon film	18k	RD¼PS 183J
R10	Carbon film	18k	RD¼PS 183J
R11	Carbon film	33k	RD¼PS 333J
R12	Carbon film	33k	RD¼PS 333J
R13	Carbon film	6.8k	RD¼PS 682J
R14	Carbon film	6.8k	RD¼PS 682J
R15	Carbon film	2.2k	RD¼PS 222J
R16	Carbon film	2.2k	RD¼PS 222J
R17	Carbon film	5.6k	RD¼PS 562J
R18	Carbon film	5.6k	RD¼PS 562J
R19	Carbon film	470k	RD¼PS 474JNL
R20	Carbon film	470k	RD¼PS 474JNL
R21	Carbon film	1k	RD¼PS 102J
R22	Carbon film	1k	RD¼PS 102J
R23	Carbon film	560k	RD¼PS 564JNL
R24	Carbon film	560k	RD¼PS 564JNL
R25	Carbon film	91k	RD¼PS 913J
R26	Carbon film	91k	RD¼PS 913J
R27	Carbon film	110k	RD¼PS 114J
R28	Carbon film	110k	RD¼PS 114J
R29	Carbon film	1.3k	RD¼PS 132J
R30	Carbon film	1.3k	RD¼PS 132J
R31	Carbon film	30k	RD¼PS 303J
R32	Carbon film	30k	RD¼PS 303J

SEMICONDUCTORS

Symbol	Description		Part No.
Q1	Transistor	2SA725-F or G (2SA763P-5 or 6)	
Q2	Transistor	2SA725-F or G (2SA763P-5 or 6)	
Q3	Transistor	2SC1313-G or F (2SC1345-E or D)	
Q4	Transistor	2SC1313-G or F (2SC1345-E or D)	
Q5	Transistor	2SC1313-G or F (2SC1345-E or D)	
Q6	Transistor	2SC1213-G or F (2SC1345-E or D)	

OTHERS

Symbol	Description	Part No.
VR1, VR2	Variable resistor 100k-B, 250k-HB (VOLUME, BALANCE)	ACV-407-0
VR3	Variable resistor 2k-B (MIC/PHONO 2 LEVEL)	ACT-105-A
S1	Rotary switch (FUNCTION)	ASD-036-0

11.3 CONTROL AMPLIFIER ASSEMBLY (AWG-034-A)

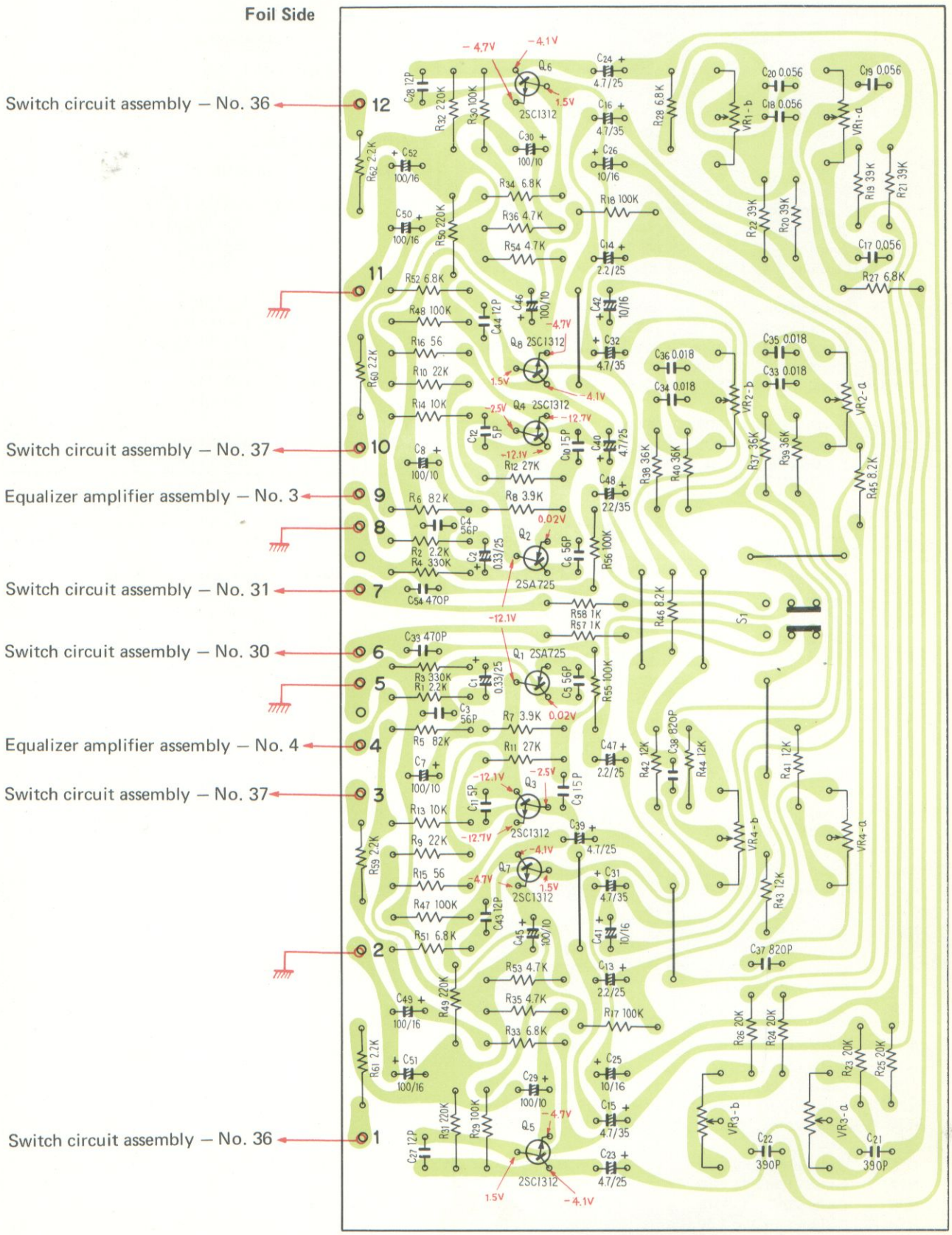

2SA725
2SC1312

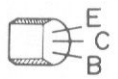

(2SA763P)
(2SC900)

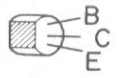

(2SC1344)

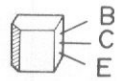

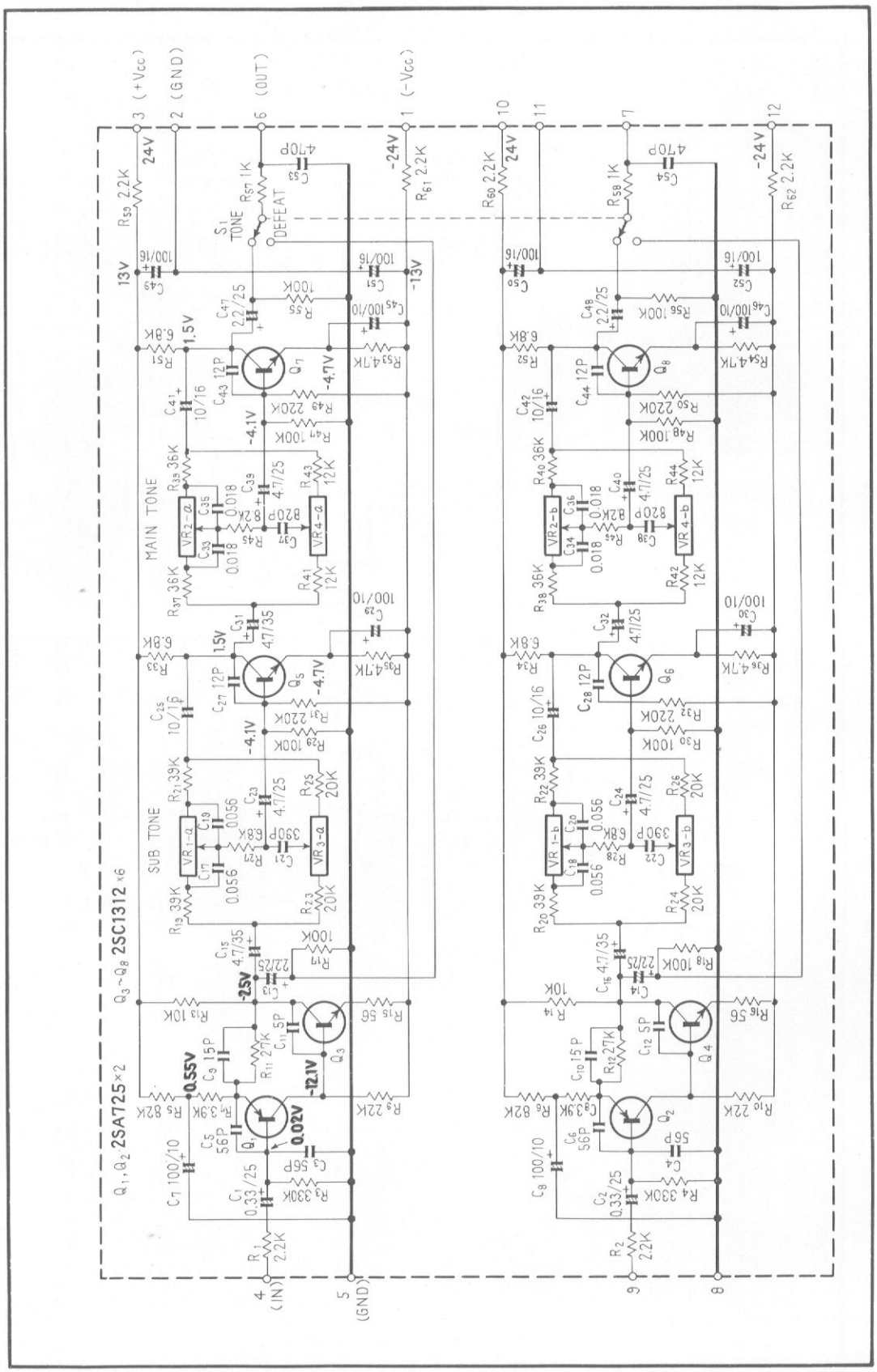

Parts List of Control Amplifier Assembly (AWG-034-A)

CAPACITORS

Symbol	Description			Part No.
C1	Electrolytic	0.33	25V	CSSA R33M 25
C2	Electrolytic	0.33	25V	CSSA R33M 25
C3	Ceramic	56p	50V	CCDSL 560K 50
C4	Ceramic	56p	50V	CCDSL 560K 50
C5	Ceramic	56p	50V	CCDSL 560K 50
C6	Ceramic	56p	50V	CCDSL 560K 50
C7	Electrolytic	100	10V	CEA 101P 10
C8	Electrolytic	100	10V	CEA 101P 10
C9	Ceramic	15p	50V	CCDSL 150K 50
C10	Ceramic	15p	50V	CCDSL 150K 50
C11	Ceramic	5p	50V	CCDSL 050D 50
C12	Ceramic	5p	50V	CCDSL 050D 50
C13	Electrolytic	2.2	25V	CSSA 2R2M 25
C14	Electrolytic	2.2	25V	CSSA 2R2M 25
C15	Electrolytic	4.7	25V	CSSA 4R7M 25
C16	Electrolytic	4.7	25V	CSSA 4R7M 25
C17	Mylar	0.056	50V	CQMA 563J 50
C18	Mylar	0.056	50V	CQMA 563J 50
C19	Mylar	0.056	50V	CQMA 563J 50
C20	Mylar	0.056	50V	CQMA 563J 50
C21	Styrol	390p	50V	CQSA 391J 50
C22	Styrol	390p	50V	CQSA 391J 50
C23	Electrolytic	4.7	25V	CEANL 4R7P 25
C24	Electrolytic	4.7	25V	CEANL 4R7P 25
C25	Electrolytic	10	16V	CSSA 100P 16
C26	Electrolytic	10	16V	CSSA 100P 16
C27	Ceramic	12p	50V	CCDSL 120K 50
C28	Ceramic	12p	50V	CCDSL 120K 50
C29	Electrolytic	100	10V	CEA 101P 10
C30	Electrolytic	100	10V	CEA 101P 10
C31	Electrolytic	4.7	25V	CSSA 4R7M 25
C32	Electrolytic	4.7	25V	CSSA 4R7M 25
C33	Mylar	0.018	50V	CQMA 183J 50
C34	Mylar	0.018	50V	CQMA 183J 50
C35	Mylar	0.018	50V	CQMA 183J 50
C36	Mylar	0.018	50V	CQMA 183J 50
C37	Styrol	820p	50V	CQSA 821J 50
C38	Styrol	820p	50V	CQSA 821J 50
C39	Electrolytic	4.7	25V	CEANL 4R7P 25
C40	Electrolytic	4.7	25V	CEANL 4R7P 25
C41	Electrolytic	10	16V	CSSA 100P 16
C42	Electrolytic	10	16V	CSSA 100P 16
C43	Ceramic	12p	50V	CCDSL 120K 50
C44	Ceramic	12p	50V	CCDSL 120K 50
C45	Electrolytic	100	10V	CEA 101P 10
C46	Electrolytic	100	10V	CEA 101P 10
C47	Electrolytic	2.2	25V	CSSA 2R2M 25
C48	Electrolytic	2.2	25V	CSSA 2R2M 25
C49	Electrolytic	100	16V	CEA 101P 16
C50	Electrolytic	100	16V	CEA 101P 16
C51	Electrolytic	100	16V	CEA 101P 16
C52	Electrolytic	100	16V	CEA 101P 16
C53	Mylar	0.018	50V	CQMA 183J 50
C54	Mylar	0.018	50V	CQMA 183J 50

RESISTORS

Symbol	Description		Part No.
R1	Carbon film	2.2k	RD¼PS 222J
R2	Carbon film	2.2k	RD¼PS 222J
R3	Carbon film	330k	RD¼PS 334J
R4	Carbon film	330k	RD¼PS 334J
R5	Carbon film	82k	RD¼PS 823J
R6	Carbon film	82k	RD¼PS 823J
R7	Carbon film	3.9k	RD¼PS 392J
R8	Carbon film	3.9k	RD¼PS 392J
R9	Carbon film	22k	RD¼PS 223J
R10	Carbon film	22k	RD¼PS 223J
R11	Carbon film	27k	RD¼PS 273J
R12	Carbon film	27k	RD¼PS 273J
R13	Carbon film	10k	RD¼PS 103J
R14	Carbon film	10k	RD¼PS 103J
R15	Carbon film	56	RD¼PS 560J
R16	Carbon film	56	RD¼PS 560J
R17	Carbon film	100k	RD¼PS 104J
R18	Carbon film	100k	RD¼PS 104J
R19	Carbon film	39k	RD¼PS 393J
R20	Carbon film	39k	RD¼PS 393J
R21	Carbon film	39k	RD¼PS 393J
R22	Carbon film	39k	RD¼PS 393J
R23	Carbon film	20k	RD¼PS 203J
R24	Carbon film	20k	RD¼PS 203J
R25	Carbon film	20k	RD¼PS 203J
R26	Carbon film	20k	RD¼PS 203J
R27	Carbon film	6.8k	RD¼PS 682J
R28	Carbon film	6.8k	RD¼PS 682J
R29	Carbon film	100k	RD¼PS 104J
R30	Carbon film	100k	RD¼PS 104J
R31	Carbon film	220k	RD¼PS 224J
R32	Carbon film	220k	RD¼PS 224J
R33	Carbon film	6.8k	RD¼PS 682J
R34	Carbon film	6.8k	RD¼PS 682J
R35	Carbon film	4.7k	RD¼PS 472J
R36	Carbon film	4.7k	RD¼PS 472J
R37	Carbon film	36k	RD¼PS 363J
R38	Carbon film	36k	RD¼PS 363J
R39	Carbon film	36k	RD¼PS 363J
R40	Carbon film	36k	RD¼PS 363J

Symbol	Description		Part No.
R41	Carbon film	12k	RD¼PS 123J
R42	Carbon film	12k	RD¼PS 123J
R43	Carbon film	12k	RD¼PS 123J
R44	Carbon film	12k	RD¼PS 123J
R45	Carbon film	8.2k	RD¼PS 822J
R46	Carbon film	8.2k	RD¼PS 822J
R47	Carbon film	100k	RD¼PS 104J
R48	Carbon film	100k	RD¼PS 104J
R49	Carbon film	220k	RD¼PS 224J
R50	Carbon film	220k	RD¼PS 224J
R51	Carbon film	6.8k	RD¼PS 682J
R52	Carbon film	6.8k	RD¼PS 682J
R53	Carbon film	4.7k	RD¼PS 472J
R54	Carbon film	5.7j	RD¼PS 472J
R55	Carbon film	100k	RD¼PS 104J
R56	Carbon film	100k	RD¼PS 104J
R57	Carbon film	1k	RD¼PS 102J
R58	Carbon film	1k	RD¼PS 102J
R59	Carbon film	2.2k	RD¼PS 222J
R60	Carbon film	2.2k	RD¼PS 222J
R61	Carbon film	2.2k	RD¼PS 222J
R62	Carbon film	2.2k	RD¼PS 222J

OTHERS

Symbol	Description	Part No.
VR1	Switch type variable resistor (SUB BASS)	ACV-152-A
VR2	Switch type variable resistor (MAIN BASS)	ACV-151-A
VR3	Switch type variable resistor (SUB TREBLE)	ACV-149-A
VR4	Switch type variable resistor (MAIN TREBLE)	ACV-150-A
S1	Lever switch (TONE)	ASK-090-A

SEMICONDUCTORS

Symbol	Description		Part No.
Q1	Transistor	2SA725-F or G (2SA763P-5 or 6) (2SA640-K or L)	
Q2	Transistor	2SA725-F or G (2SA763P-5 or 6) (2SA640-K or L)	
Q3	Transistor	2SC1312-G or H (2SC1344-D or E) (2SC900-E or F)	
Q4	Transistor	2SC1312-G or H (2SC1344-D or E) (2SC900-E or F)	
Q5	Transistor	2SC1312-G or H (2SC1344-D or E) (2SC900-E or F)	
Q6	Transistor	2SC1312-G or H (2SC1344-D or E) (2SC900-E or F)	
Q7	Transistor	2SC1312-G or H (2SC1344-D or E) (2SC900-E or F)	
Q8	Transistor	2SC1312-G or H (2SC1344-D or E) (2SC900-E or F)	

11.4 POWER AMPLIFIER ASSEMBLY (AWH-042-0)

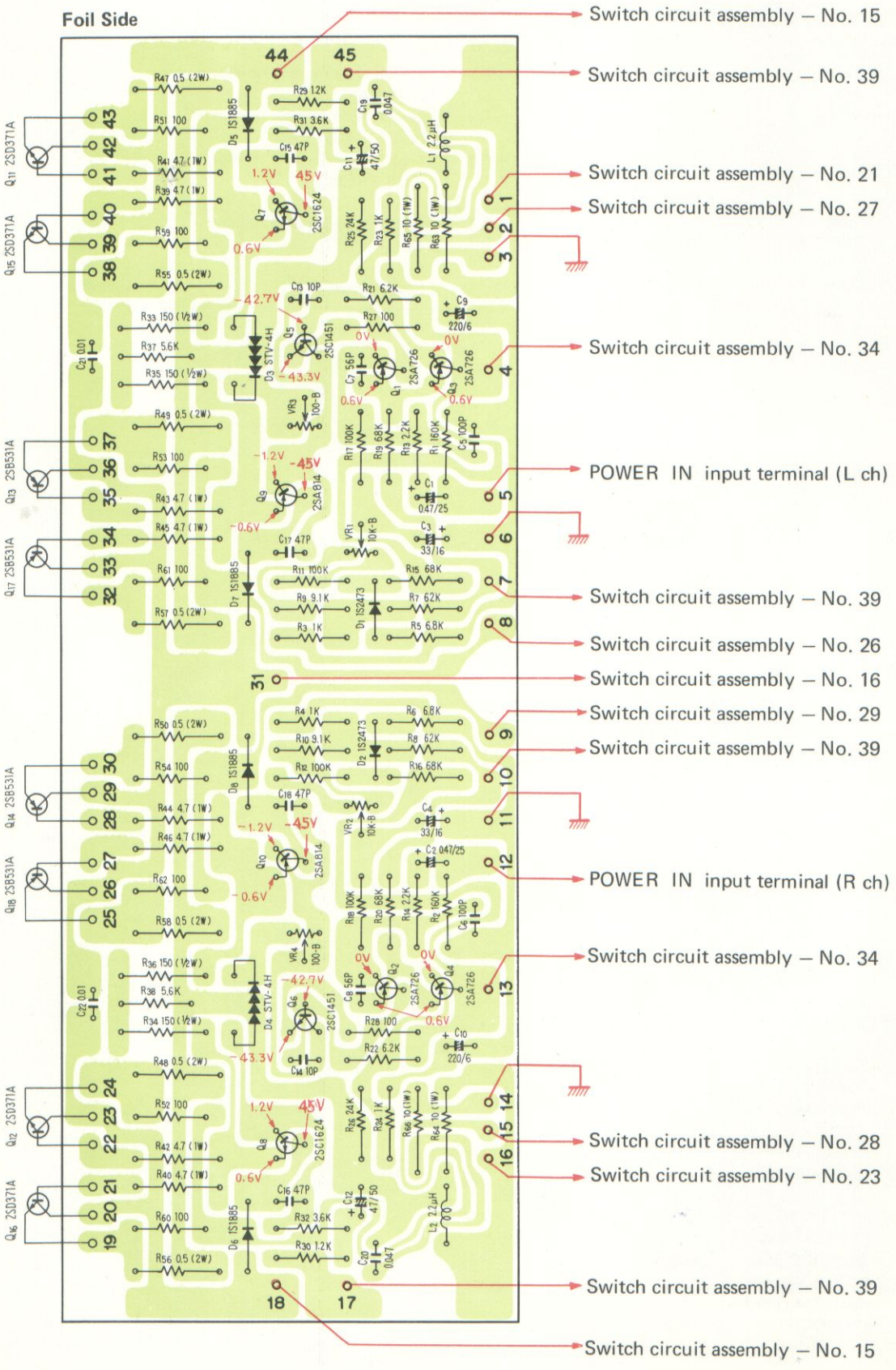

2SA814
(2SB536)
2SC1624
(2SD381)

2SA726

2SC1451

(2SA763F)

Parts List of Power Amplifier Assembly (AWH-042-0)

CAPACITORS

Symbol	Description			Part No.
C1	Electrolytic	0.47	25V	CSSA R47M 25
C2	Electrolytic	0.47	25V	CSSA R47M 25
C3	Electrolytic	33	16V	CEA 330P 16
C4	Electrolytic	33	16V	CEA 330P 16
C5	Ceramic	100p	50V	CCDSL 101K 50
C6	Ceramic	100p	50V	CCDSL 101K 50
C7	Ceramic	56p	50V	CCDSL 560K 50
C8	Ceramic	56p	50V	CCDSL 560K 50
C9	Electrolytic	220	6V	CEA 221P 6
C10	Electrolytic	220	6V	CEA 221P 6
C11	Electrolytic	47	50V	CEA 470P 50
C12	Electrolytic	47	50V	CEA 470P 50
C13	Ceramic	10p	50V	CCDSL 100F 50
C14	Ceramic	10p	50V	CCDSL 100F 50
C15	Ceramic	47p	50V	CCDSL 470K 50
C16	Ceramic	47p	50V	CCDSL 470K 50
C17	Ceramic	47p	50V	CCDSL 470K 50
C18	Ceramic	47p	50V	CCDSL 470K 50
C19	Mylar	0.047	50V	CQMA 473M 50
C20	Mylar	0.047	50V	CQMA 473M 50
C21	Ceramic	0.01	500V	CKDYF 103Z 500
C22	Ceramic	0.01	500V	CKDYF 103Z 500

RESISTORS

Symbol	Description			Part No.
R1	Carbon film	160k		RD¼PS 164JNL
R2	Carbon film	160k		RD¼PS 164JNL
R3	Carbon film	1k		RD¼PS 102J
R4	Carbon film	1k		RD¼PS 102J
R5	Carbon film	6.8k		RD¼PS 682J
R6	Carbon film	6.8k		RD¼PS 682J
R7	Carbon film	62k		RD¼PS 623J
R8	Carbon film	62k		RD¼PS 623J
R9	Carbon film	9.1k		RD¼PS 912J
R10	Carbon film	9.1k		RD¼PS 912J
R11	Carbon film	100k		RD¼PS 104JNL
R12	Carbon film	100k		RD¼PS 104JNL
R13	Carbon film	2.2k		RD¼PS 222J
R14	Carbon film	2.2k		RD¼PS 222J
R15	Carbon film	68k		RD¼PS 683J
R16	Carbon film	68k		RD¼PS 683J
R17	Carbon film	100k		RD¼PS 104JNL
R18	Carbon film	100k		RD¼PS 104JNL
R19	Carbon film	68k		RD¼PS 683J
R20	Carbon film	68k		RD¼PS 683J
R21	Carbon film	6.2k		RD¼PS 622J
R22	Carbon film	6.2k		RD¼PS 622J
R23	Carbon film	1k		RD¼PS 102J
R24	Carbon film	1k		RD¼PS 102J
R25	Carbon film	24k		RD¼PS 243J
R26	Carbon film	24k		RD¼PS 243J
R27	Carbon film	100		RD¼PS 101J
R28	Carbon film	100		RD¼PS 101J
R29	Carbon film	1.2k		RD¼PS 122J
R30	Carbon film	1.2k		RD¼PS 122J
R31	Carbon film	3.6k		RD¼PS 362J
R32	Carbon film	3.6k		RD¼PS 362J
R33	Carbon film	150	½W	RD½PS 151J
R34	Carbon film	150	½W	RD½PS 151J
R35	Carbon film	150	½W	RD½PS 151J
R36	Carbon film	150	½W	RD½PS 151J
R37	Carbon film	5.6k		RD¼PS 562J
R38	Carbon film	5.6k		RD¼PS 562J
R39	Metal film	4.7	1W	RN1H 4R7K
R40	Metal film	4.7	1W	RN1H 4R7K
R41	Metal film	4.7	1W	RN1H 4R7K
R42	Metal film	4.7	1W	RN1H 4R7K
R43	Metal film	4.7	1W	RN1H 4R7K
R44	Metal film	4.7	1W	RN1H 4R7K
R45	Metal film	4.7	1W	RN1H 4R7K
R46	Metal film	4.7	1W	RN1H 4R7K
R47	Metal film	0.5	2W	RN2H 0R5K
R48	Metal film	0.5	2W	RN2H 0R5K
R49	Metal film	0.5	2W	RN2H 0R5K
R50	Metal film	0.5	2W	RN2H 0R5K
R51	Carbon film	100		RD¼PS 101J
R52	Carbon film	100		RD¼PS 101J
R53	Carbon film	100		RD¼PS 101J
R54	Carbon film	100		RD¼PS 101J
R55	Metal film	0.5	2W	RN2H 0R5K
R56	Metal film	0.5	2W	RN1H 0R5K
R57	Metal film	0.5	2W	RN2H 0R5K
R58	Metal film	0.5	2W	RN2H 0R5K
R59	Carbon film	100		RD¼PS 101J
R60	Carbon film	100		RD¼PS 101J
R61	Carbon film	100		RD¼PS 101J
R62	Carbon film	100		RD¼PS 101J
R63	Metal oxide	10	1W	RS1P 100J
R64	Metal oxide	10	1W	RS1P 100J
R65	Metal oxide	10	1W	RS1P 100J
R66	Metal oxide	10	1W	RS1P 100J

SEMICONDUCTORS

Symbol	Description		Part No.
Q1	Transistor	2SA726-G or F (2SA763F-6 or 5)	
Q2	Transistor	2SA726-G or F (2SA763F-6 or 5)	
Q3	Transistor	2SA726-G or F (2SA763F-6 or 5)	
Q4	Transistor	2SA726-G or F (2SA763F-6 or 5)	
Q5	Transistor	2SC1451-V or B	
Q6	Transistor	2SC1451-V or B	
Q7	Transistor	2SC1624-0 or Y (2SD381-L or M)	
Q8	Transistor	2SC1624-0 or Y (2SD381-L or M)	
Q9	Transistor	2SA814-0 or Y (2SB536-L or M)	
Q10	Transistor	2SA814-0 or Y (2SB536-L or M)	
D1	Diode	1S2473 (1S1555)	
D2	Diode	1S2473 (1S1555)	
D3	Diode	STV4H	
D4	Diode	STV4H	
D5	Diode	1S1885 (SIB01-01)	
D6	Diode	1S1885 (SIB01-01)	
D7	Diode	1S1885 (SIB01-01)	
D8	Diode	1S1885 (SIB01-01)	

OTHERS

Symbol	Description		Part No.
VR1	Semi-fixed	10k-B	C92-049-0
VR2	Semi-fixed	10k-B	C92-049-0
VR3	Semi-fixed	100-B	C92-063-0
VR4	Semi-fixed	100-B	C92-063-0
L1	AF choke coil		T63-009-0
L2	AF choke coil		T63-009-0

11.5.1 SWITCH CIRCUIT ASSEMBLY (AWS-083-D) FOR "KCU" AND "FV" TYPES

NOTE:
FU1 is not equipped in FV type.

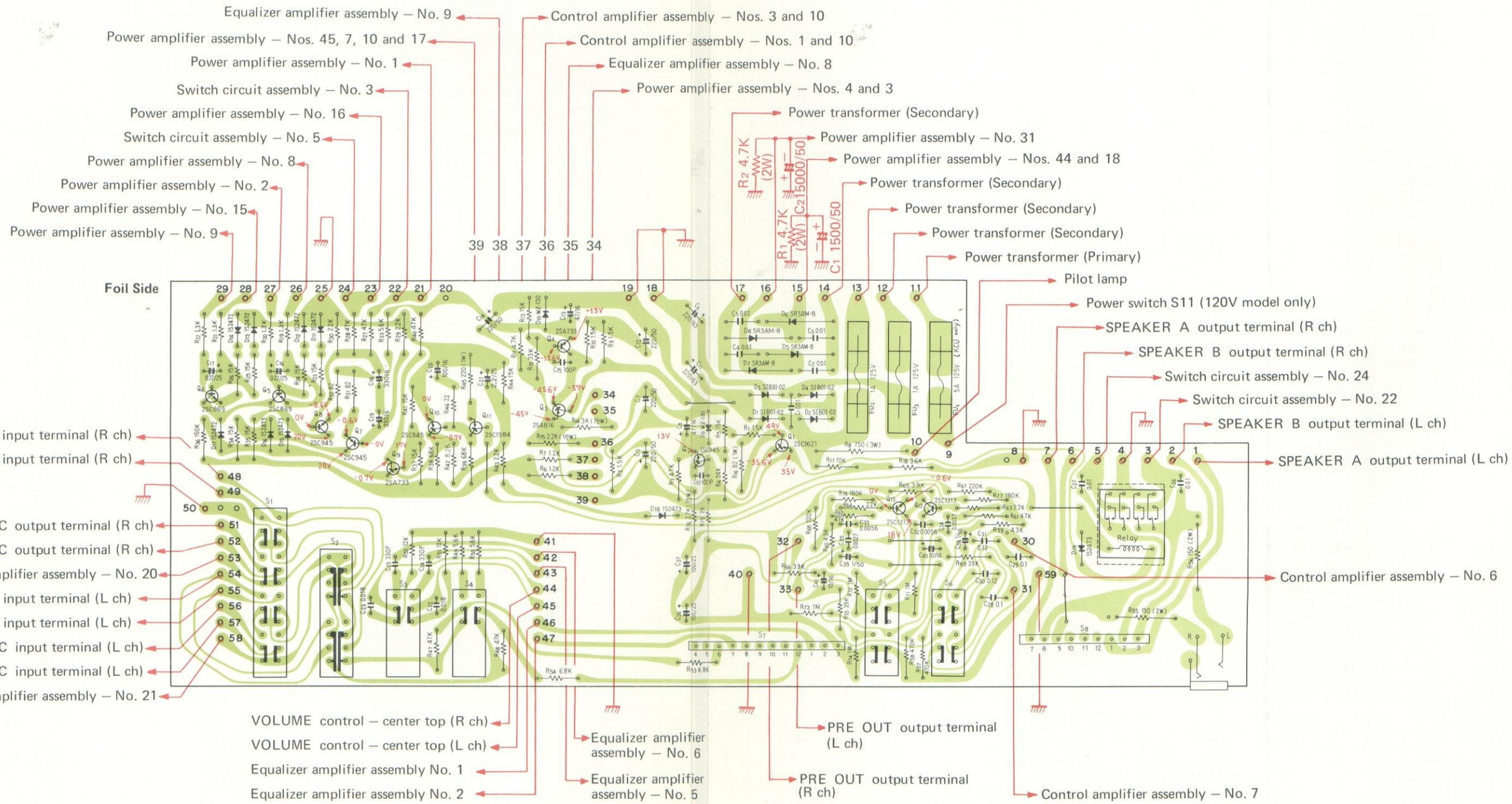

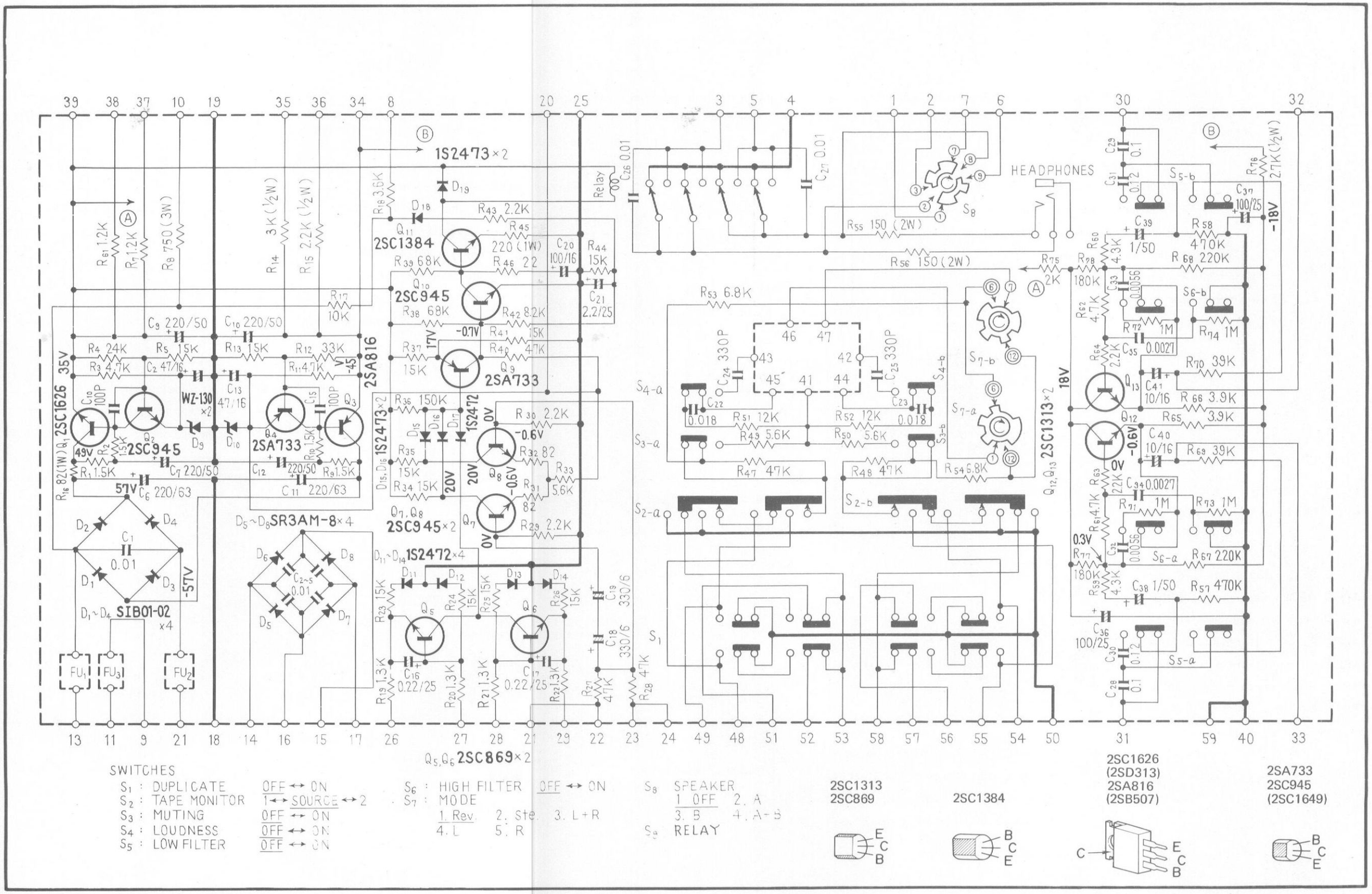
1S2473×2
2SC1384
2SC945
2SA733
2SA816
2SC1626
WZ-130
SR3AM-8×4
SIB01-02
1S2472×4
2SC945×2
2SC1313×2
HEADPHONES
Relay
Q5,Q6 2SC869×2
SWITCHES
S1 : DUPLICATE OFF ↔ ON
S2 : TAPE MONITOR 1 ↔ SOURCE ↔ 2
S3 : MUTING OFF ↔ ON
S4 : LOUDNESS OFF ↔ ON
S5 : LOW FILTER OFF ↔ ON
S6 : HIGH FILTER OFF ↔ ON
S7 : MODE
1. Rev. 2. Ste. 3. L+R
4. L 5. R
S8 SPEAKER
1 OFF 2. A
3. B 4. A+B
S9 RELAY
2SC1313
2SC869
2SC1384
2SC1626
(2SD313)
2SA816
(2SB507)
2SA733
2SC945
(2SC1649)

11.5.2 SWITCH CIRCUIT ASSEMBLY (AWS-085-B) FOR "GN" TYPE

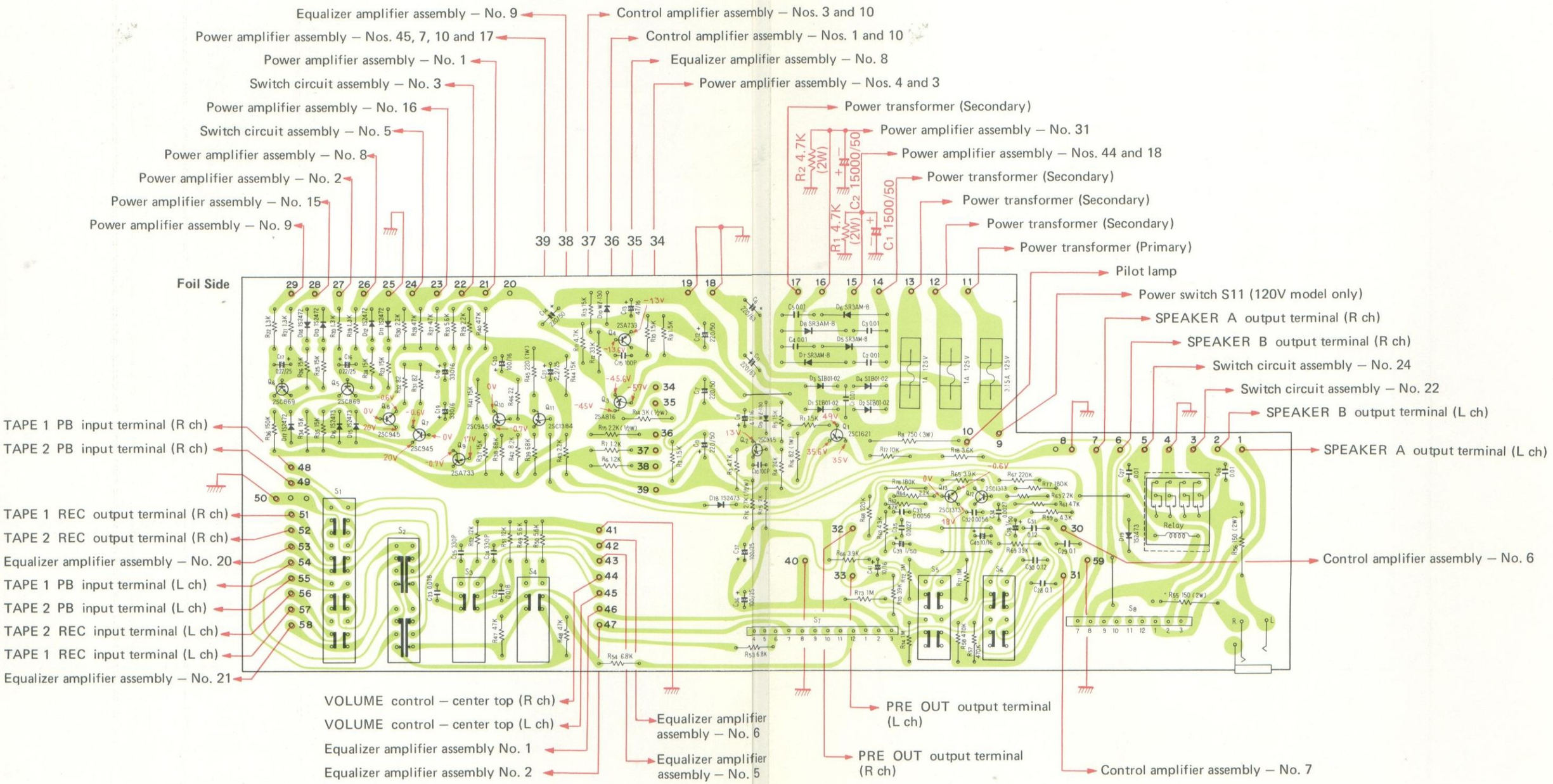

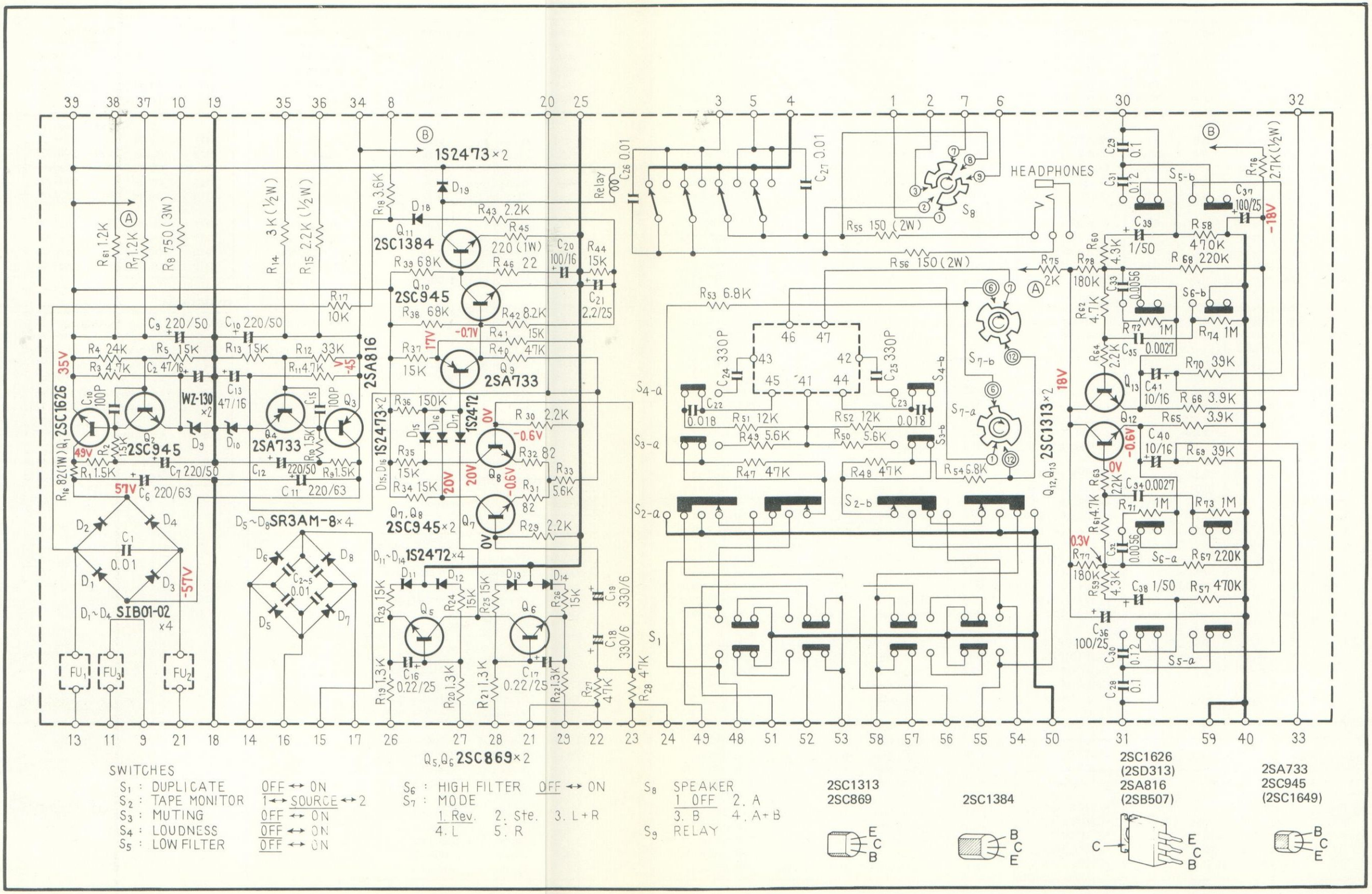
1S2473×2
2SC1384
2SC945
2SA733
2SA816
2SC1626
2SC945
2SA733
WZ-130
2SC945×2
1S2472×4
1S2473×2
1S2472
SR3AM-8×4
SIB01-02
2SC1313×2
2SC1313
2SC1384
2SC1626
(2SD313)
2SA816
(2SB507)
2SA733
2SC945
(2SC1649)
HEADPHONES
Relay
Q5,Q6 2SC869×2
SWITCHES
S1 : DUPLICATE OFF ↔ ON
S2 : TAPE MONITOR 1 ↔ SOURCE ↔ 2
S3 : MUTING OFF ↔ ON
S4 : LOUDNESS OFF ↔ ON
S5 : LOW FILTER OFF ↔ ON
S6 : HIGH FILTER OFF ↔ ON
S7 : MODE
1. Rev. 2. Ste. 3. L+R
4. L 5. R
S8 SPEAKER
1 OFF 2. A
3. B 4. A+B
S9 RELAY
2SC1313
2SC869
2SC1384
2SC1626
(2SD313)
2SA816
(2SB507)
2SA733
2SC945
(2SC1649)

Parts List of Switch Circuit Assembly (AWS-083-D) and (AWS-085-B)

CAPACITORS

Symbol	Description			Part No.
C1	Ceramic	0.01	150V	ACG-004-0
C2	Ceramic	0.01	150V	ACG-004-0
C3	Ceramic	0.01	150V	ACG-004-0
C4	Ceramic	0.01	150V	ACG-004-0
C5	Ceramic	0.01	150V	ACG-004-0
C6	Electrolytic	220	63V	GEA 221P 63
C7	Electrolytic	220	50V	CEA 221P 50
C8	Electrolytic	47	16V	CEA 470P 16
C9	Electrolytic	220	50V	CEA 221P 50
C10	Ceramic	100p	50V	CCDSL 101K 50
C11	Electrolytic	220	63V	CEA 221P 63
C12	Electrolytic	220	50V	CEA 221P 50
C13	Electrolytic	47	16V	CEA 470P 16
C14	Electrolytic	220	50V	CEA 221P 50
C15	Ceramic	100p	50V	CCDSL 101K 50
C16	Electrolytic	0.22	25V	CSSA R22M 25
C17	Electrolytic	0.22	25V	CSSA R22M 25
C18	Electrolytic	330	6V	CEA 331P 6
C19	Electrolytic	330	6V	CEA 331P 6
C20	Electrolytic	100	16V	CEA 101P 16
C21	Electrolytic	2.2	25V	CSSA 2R2M 25
C22	Mylar	0.018	50V	CQMA 183J 50
C23	Mylar	0.018	50V	CQMA 183J 50
C24	Ceramic	330p	50V	CCDSL 331J 50
C25	Ceramic	330p	50V	CCDSL 331J 50
C26	Ceramic	0.01	50V	CKDYF 103Z 50
C27	Ceramic	0.01	50V	CKDYF 103Z 50
C28	Mylar	0.1	50V	CQMA 104J 50
C29	Mylar	0.1	50V	CQMA 104J 50
C30	Mylar	0.12	50V	CQMA 124J 50
C31	Mylar	0.12	50V	CQMA 124J 50
C32	Mylar	5600p	50V	CQMA 562J 50
C33	Mylar	5600p	50V	CQMA 562J 50
C34	Mylar	2700p	50V	CQMA 272J 50
C35	Mylar	2700p	50V	CQMA 272J 50
C36	Electrolytic	100	25V	CEA 101P 25
C37	Electrolytic	100	25V	CEA 101P 25
C38	Electrolytic	1	50V	CEA 010P 50
C39	Electrolytic	1	50V	CEA 010P 50
C40	Electrolytic	10	25V	CEA 100P 25
C41	Electrolytic	10	25V	CEA 100P 25

RESISTORS

Symbol	Description			Part No.
R1	Carbon film	1.5k		RD¼PS 152J
R2	Carbon film	1.5k		RD¼PS 152J
R3	Carbon film	4.7k		RD¼PS 472J
R4	Carbon film	24k		RD¼PS 243J
R5	Carbon film	15k		RD¼PS 153J
R6	Carbon film	1.2k		RD¼PS 122J
R7	Carbon film	1.2k		RD¼PS 122J
R8	Metal oxide	750	3W	RS3P 751J
R9	Carbon film	1.5k		RD¼PS 152J
R10	Carbon film	1.5k		RD¼PS 152J
R11	Carbon film	4.7k		RD¼PS 472J
R12	Carbon film	33k		RD¼PS 333J
R13	Carbon film	15k		RD¼PS 153J
R14	Carbon film	3k	½W	RD½PS 302J
R15	Carbon film	2.2k	½W	RD½PS 222J
R16	Metal oxide	82	1W	RS1P 820J
R17	Carbon film	10k		RD¼PS 103J
R18	Carbon film	3.6k		RD¼PS 362J
R19	Carbon film	1.3k		RD¼PS 132J
R20	Carbon film	1.3k		RD¼PS 132J
R21	Carbon film	1.3k		RD¼PS 132J
R22	Carbon film	1.3k		RD¼PS 132J
R23	Carbon film	15k		RD¼PS 153J
R24	Carbon film	15k		RD¼PS 153J
R25	Carbon film	15k		RD¼PS 153J
R26	Carbon film	15k		RD¼PS 153J
R27	Carbon film	47k		RD¼PS 473J
R28	Carbon film	47k		RD¼PS 473J
R29	Carbon film	2.2k		RD¼PS 222J
R30	Carbon film	2.2k		RD¼PS 222J
R31	Carbon film	82		RD¼PS 820J
R32	Carbon film	82		RD¼PS 820J
R33	Carbon film	5.6k		RD¼PS 562J
R34	Carbon film	15k		RD¼PS 153J
R35	Carbon film	15k		RD¼PS 153J
R36	Carbon film	150k		RD¼PS 154J
R37	Carbon film	15k		RD¼PS 153J
R38	Carbon film	68k		RD¼PS 683J
R39	Carbon film	68k		RD¼PS 683J
R40	Carbon film	47k		RD¼PS 473J
R41	Carbon film	15k		RD¼PS 153J
R42	Carbon film	12k		RD¼PS 123J
R43	Carbon film	2.2k		RD¼PS 222J
R44	Carbon film	15k		RD¼PS 153J
R45	Metal oxide	220	1W	RS1P 221J
R46	Carbon film	22		RD¼PS 220J
R47	Carbon film	47k		RD¼PS 473J
R48	Carbon film	47k		RD¼PS 473J
R49	Carbon film	5.6k		RD¼PS 562J
R50	Carbon film	5.6k		RD¼PS 562J
R51	Carbon film	12k		RD¼PS 123J
R52	Carbon film	12k		RD¼PS 123J
R53	Carbon film	6.8k		RD¼PS 682J
R54	Carbon film	6.8k		RD¼PS 682J
R55	Metal oxide	150	2W	RS2P 151J

Symbol	Description			Part No.
R56	Metal oxide	150	2W	RS2P 151J
R57	Carbon film	470k		RD¼PS 474J
R58	Carbon film	470k		RD¼PS 474J
R59	Carbon film	4.3k		RD¼PS 432J
R60	Carbon film	4.3k		RD¼PS 432J
R61	Carbon film	4.7k		RD¼PS 472J
R62	Carbon film	4.7k		RD¼PS 472J
R63	Carbon film	2.2k		RD¼PS 222J
R64	Carbon film	2.2k		RD¼PS 222J
R65	Carbon film	3.9k		RD¼PS 392J
R66	Carbon film	3.9k		RD¼PS 392J
R67	Carbon film	220k		RD¼PS 224J
R68	Carbon film	220k		RD¼PS 224J
R69	Carbon film	39k		RD¼PS 393J
R70	Carbon film	39k		RD¼PS 393J
R71	Carbon film	1M		RD¼PS 105J
R72	Carbon film	1M		RD¼PS 105J
R73	Carbon film	1M		RD¼PS 105J
R74	Carbon film	1M		RD¼PS 105J
R75	Carbon film	2k		RD¼PS 202J
R76	Carbon film	2.7k		RD¼PS 272J
R77	Carbon film	180k		RD¼PS 184J
R78	Carbon film	180k		RD¼PS 184J

SEMICONDUCTORS

Symbol	Description		Part No.
Q1	Transistor	2SC1626-0 or Y (2SD313P-D or E)	
Q2	Transistor	2SC945-Q or R	
Q3	Transistor	2SA816-0 or Y (2SB507-R or 0)	
Q4	Transistor	2SA733-Q or R	
Q5	Transistor	2SC869-C, B or D (2SC1649-N or F)	
Q6	Transistor	2SC869-C, B, or D (2SC1649-N or F)	
Q7	Transistor	2SC945-Q or R	
Q8	Transistor	2SC945-Q or R	
Q9	Transistor	2SA733-Q or R	
Q10	Transistor	2SC945-Q or R	
Q11	Transistor	2SC1384-R or Q	
Q12	Transistor	2SC1313	
Q13	Transistor	2SC1313	
D1	Diode	SIB01-02	
D2	Diode	SIB01-02	
D3	Diode	SIB01-02	
D4	Diode	SIB01-02	
D5	Diode	SR3AM-8	
D6	Diode	SR3AM-8	
D7	Diode	SR3AM-8	
D8	Diode	SR3AM-8	
D9	Zener diode	WZ-130	
D10	Zener diode	WZ-130	
D11	Diode	1S2472	
D12	Diode	1S2472	
D13	Diode	1S2472	
D14	Diode	1S2472	
D15	Diode	1S2473	
D16	Diode	1S2473	
D17	Diode	1S2472	
D18	Diode	1S2473	
D19	Diode	1S2473	

OTHERS

Symbol	Description	Part No.
S1	Lever switch (DUPLICATE)	ASK-086-B
S2	Lever switch (TAPE MONITOR)	ASK-086-B
S3	Lever switch (MUTING)	ASK-090-A
S4	Lever switch (LOUDNESS)	ASK-090-A
S5	Lever switch (LOW FILTER)	ASK-091-B
S6	Lever switch (HIGH FILTER)	ASK-091-B
S7	Rotary switch (MODE)	ASD-029-0
S8	Rotary switch (SPEAKERS)	ASD-038-0
S9	Relay	ASR-010-0

11.6 5P CONNECTOR ASSEMBLY (AWX-062-0)

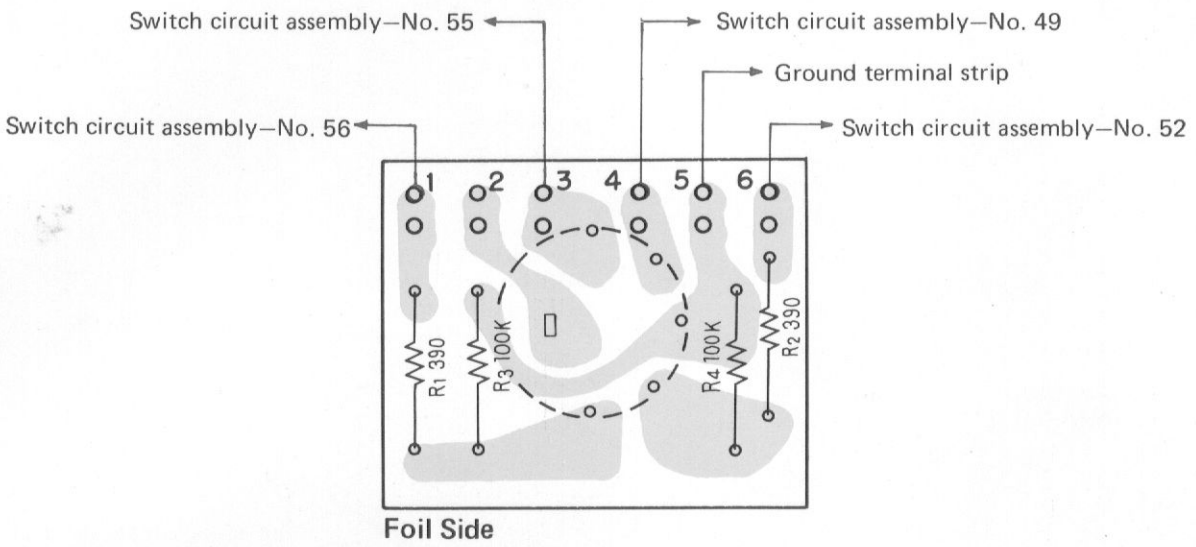

Foil Side

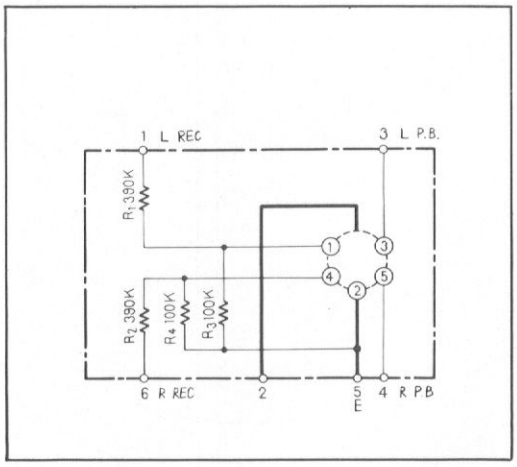

Parts List of 5P Connector Assembly (AWX-062-0)

RESISTORS

Symbol	Description	Part No.
R1	Carbon film 390k	RD¼PS 394J
R2	Carbon film 390k	RD¼PS 394J
R3	Carbon film 100k	RD¼PS 104J
R4	Carbon film 100k	RD¼PS 104J

OTHER

Symbol	Description	Part No.
	5P connector socket	AKP-007-A

12. PACKING

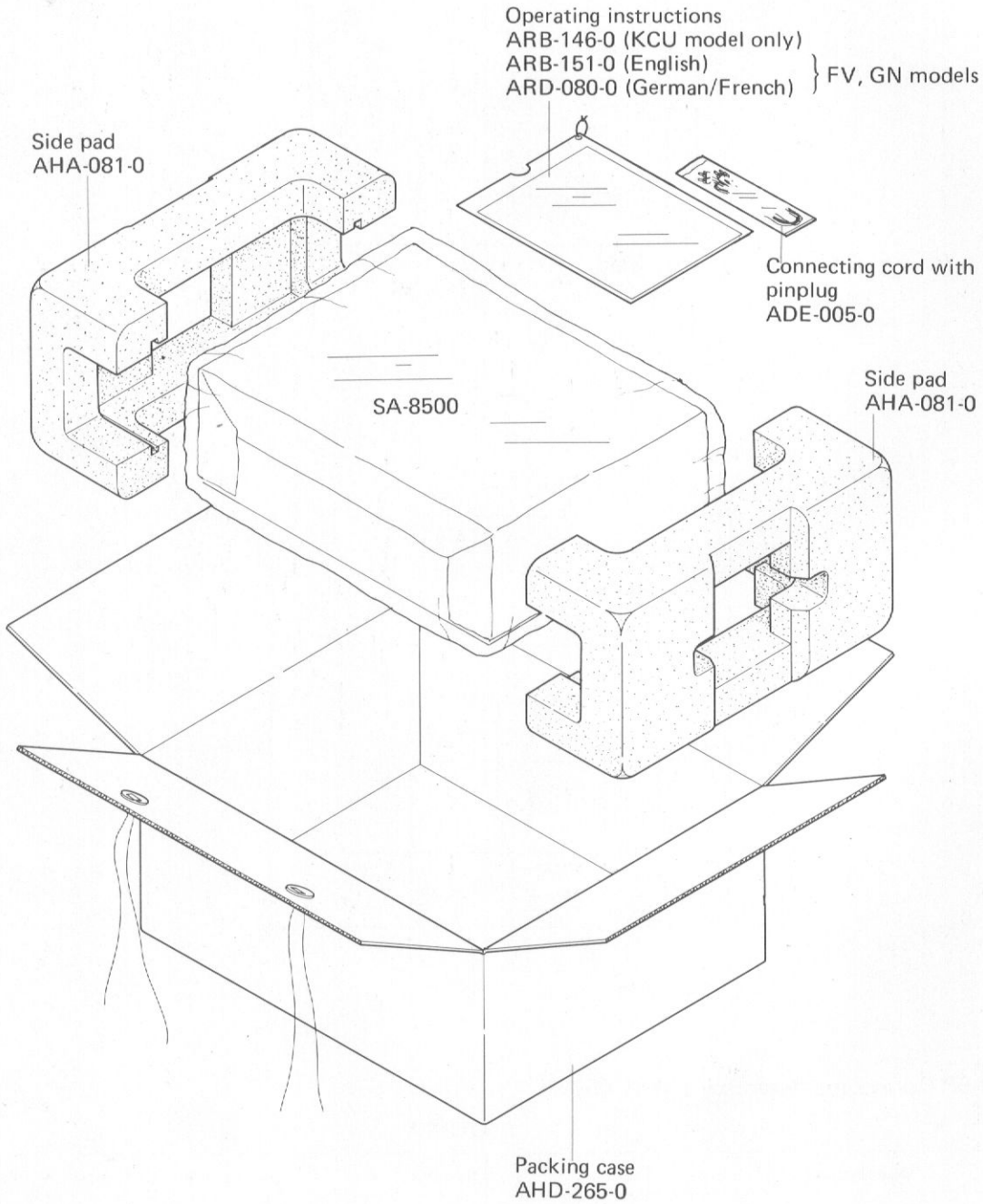
Operating instructions
ARB-146-0 (KCU model only)
ARB-151-0 (English)
ARD-080-0 (German/French)
FV, GN models
Side pad
AHA-081-0
Connecting cord with
pinplug
ADE-005-0
SA-8500
Side pad
AHA-081-0
Packing case
AHD-265-0